SYS2500-62 5/18/99
HME#400198 Rev F

Systems 2500D and 2510

Wireless Drive-Thru Audio Systems

Installation Instructions

6675 Mesa Ridge Road, San Diego, CA 92121 USA
Phone: 1-800-848-4468 Fax: (858) 552-0172

hme®
HM ELECTRONICS, INC.

INTRODUCTION

These instructions are for installation and checkout of HME Wireless Drive-Thru Audio Systems 2500D and 2510.

Installation requirements may vary. The installations described in these instructions are for typical drive-thru operations.

Read and follow these instructions carefully before installing the equipment. Pay particular attention to items in **BOLD** or ***ITALICIZED*** print.

Systems 2500D and 2510 are type-accepted, wireless radio systems, requiring a Federal Communications Commission station license if operated within the United States or its possessions. The FCC requires the user to apply for this license.

This device complies with Part 15 of the FCC rules. Operation subject to condition that this device does not cause harmful interference.

TABLE OF CONTENTS

I. EQUIPMENT INVENTORY

As the system is unpacked, check each item against the packing list with the owner/manager of the installation site, to verify receipt of all components. If any item on the packing list is missing or damaged, contact your HME sales representative. Advise the owner/manager to fill out the HME SYSTEM INVENTORY/INSTALLATION ACCEPTANCE VERIFICATION form (enclosed with the equipment), and return it immediately to HME.

II. TOOLS AND MATERIALS REQUIRED

Be certain you have the items listed below before beginning the installation.

- Tape measure
- Phillips (cross point) and standard (slotted) screwdrivers
- Electric drill with ⅛ inch (3mm), ¼ inch (6mm), ½ inch (13mm) and ¾ (19mm) bits to drill the mounting surface (wood, cinder block or metal) where base station and speaker/microphone will be installed
- Soldering iron and solder
- Electrical tape
- Fish tape

III. PRE-INSTALLATION CHECK

Be certain the site has been properly prepared for the installation. If a loop type vehicle detection system is going to be used, a vehicle detector loop must be already installed. PVC conduit must be buried, extending from the speaker post or menu board area(s) to the point of entry for the cables to go into the building. Electrical power must be available and turned on in the building where the equipment will be installed. When deciding where to place the base station, check for potential interference problems due to construction of the building and/or placement of large metal objects, lights, junction blocks or other electronic systems such as computerized cash registers. Consider these factors in deciding where to place audio system components, and whether or not additional antennas will be required for transmission/reception around such obstacles.

IV. BATTERY CHARGING

IMPORTANT: Before installing the system, plug the AC2000 Battery Charger into an AC electrical outlet, and place all COMMUNICATOR® batteries into it for charging while the system is being installed.

Connect the battery charger cable to one of the AC adapters. Plug the connector into the back of the charger. Plug the adapter into an AC electrical outlet and secure it to the outlet with the grounding screw, if provided.

New batteries are not charged before they leave the factory, and must be charged before the system is installed. Place the batteries in the AC 2000 Battery Charger to fully charge them before they are used. Follow the instructions inside the battery charger case.

When you insert a battery in the charger, the red CHARGING indicator below it will light. When the battery is fully charged, the green READY indicator below it will light (approximately 10 hours).

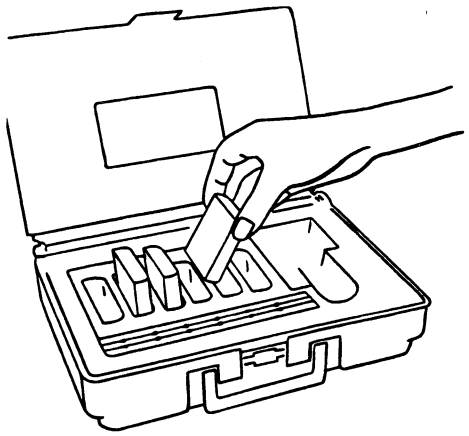

Place all new batteries in the AC2000 Battery Charger for charging.

Figure 1.

CAUTION: Do not remove batteries from the battery charger until the green READY light is lit, or the charger will reset and the charge cycle will begin again.

V. INTERFERENCE PREVENTION

CAUTION: Interference may occur if the audio system is not properly installed.

The following types of interference could occur if precautions are not taken in installation of the system. **Read this section carefully before proceeding with the installation.**

A. Radio Frequency (RF) Interference

Resolving the cause of RF interference is difficult and time-consuming. The following precautions will help avoid the most common RF interference problems.

- ❑ Be certain any backup wired system connected to the audio system is unplugged from its power source while the wireless audio system is being used.
- ❑ Find the best base station/antenna location before mounting the base station permanently.
- ❑ Solder all joints (including crimp joints) at the speaker location. This is especially important in damp climates
- ❑ Be certain all joints and connections are tight.
- ❑ Avoid leaving long lengths of unshielded wire anywhere in the audio system.
- ❑ Ground the shield of the outgoing speaker cable. In severe cases of interference, grounding the shield at the speaker may help.

AM broadcast and FM radio frequency interference may cause similar problems but require different corrective action. AM interference symptoms may appear to be less severe at certain times of day, since a 50% reduction of transmitter output power at dusk (5-7 PM) is required in some areas for AM radio stations rated at or above 100kW. Note the following symptoms carefully to determine the possible cause of interference.

1. AM Interference

Static or hum may be heard in the COMMUNICATOR® headset when a vehicle is present at the outside speaker or when the system vehicle detector override switch is placed in the OVERRIDE position. The point of entry of the AM interference is at the outside speaker via the cables connected to the base station. In order to block out the AM signal, first locate and identify any AM station in the area, and find out its operating frequency and transmitter output power. The system can then be modified with a network of inductors and capacitors that will trap the undesirable AM signal at the point of entry into the system. Call the HME Customer Support Department for assistance at 1-800-848-4468.

Static, hum and/or voice may be heard in the Communicator headset when a vehicle is present at the outside speaker, when the vehicle detector override switch is placed in the OVERRIDE position or when transmitting in either channel A or B. The point of entry for the interference can be at three different locations: the outside speaker cables, the Communicator receiver, and the base station transmitter. The AM station frequency may completely suppress or overpower the audio system's transmitter signal, depending on the operating frequency, transmitter tower location and output power of the AM radio station. A change of the System 2000D operating frequency may be necessary. Call the HME Customer Support Department for assistance at 1-800-848-4468.

2. FM Interference

A common symptom of FM interference is the presence of **voices from outside the system** in the Communicator headset when transmitting on either channel A or B, or when a vehicle is present at the outside speaker. Be certain the site owner/manager has a clearly posted, current FCC license, and contact the FCC for assistance.

B. Electrical Interference

The effect of electrical faults in appliances and other electrical equipment can make operation of a wireless system ineffective in communicating with customers. The most common symptoms are **static, hum, crackling, buzzing and zip sounds** in the headset of the Communicator when a vehicle is present at the outside speaker or when the vehicle detector override switch is placed in the OVERRIDE position. Interference caused by electrical faults in lighting systems might not be noticed immediately, since most lighting systems are controlled by a timer or light-sensing device.

1. Faulty Wiring or Components

Faulty components or electrical wiring in menu boards or speaker posts can cause symptoms identical to those caused by AM interference. Remove power to the menu board or speaker post at the circuit breaker until proper repair of the electrical system can be made.

2. Improper Earth Grounds

Improper earth grounds throughout the building can result in **random buzzing and zips** in the Communicator when operating in either channel A or B. Placing a surge protector between the base station AC adapter and the AC electrical outlet will eliminate the problem in most cases.

VI. INSTALLATION PROCEDURE

At sites where the HME system is replacing an older system, the new base station should be installed first, with only power connected. An employee wearing a COMMUNICATOR® can then stand outside, near the speaker post or menu board, and use the Communicator "B" channel to relay drive-thru orders to an employee inside the building, who is also wearing a Communicator. This will allow drive-thru business to continue while the outside speaker and cables are being replaced.

A. Installing the Base Station

- ❑ Determine a desirable location on the wall inside the building to mount the base station at eye level, at least 12 inches (300mm) below the ceiling, and away from grease and large metal objects. See Figure 3, page 7.

  CAUTION: If a System 20A has already been installed, the System 2500D/2510 base station must be at least 4 feet (1.22 meters) from the System 20A control unit.

  NOTE: It must be near enough to an available AC electrical outlet to reach the outlet with the 10 foot (3 meters) AC power adapter cord. It must also be near enough to the service window to be reached by the cables which will be pulled into the building through the wall.

- ❑ Connect each of the two rubber-duck antennas to the metal connectors on top of the base station. See Figure 2.

- ❑ Connect the base station AC adapter cord to J7 pins 1 and 2, marked 16VAC PWR, on the top, back of the base station. See Figure 2. Connect the other end of the cord to the AC adapter, and plug the adapter into the electrical outlet nearest the desired base-station mounting location.

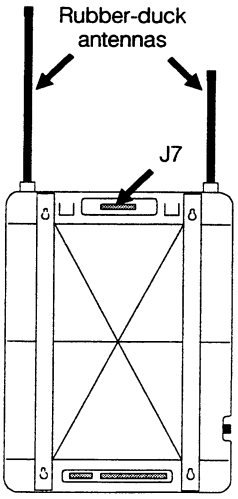

Base station, rear view

Figure 2.

- ❑ Walk test transmission and reception with a Communicator (using a fully charged battery) around the area where the Communicators will be used. Speak into the headset microphone and listening to your own voice (sidetone) in the headset. Continue doing this with the base station in various positions until the best possible transmission/reception is found. Mount the base station on the wall, at this location, as follows.

- ❑ Hold the enclosed template on the wall and mark the wall through the four screw-hole targets shown on the template. See Figure 3.

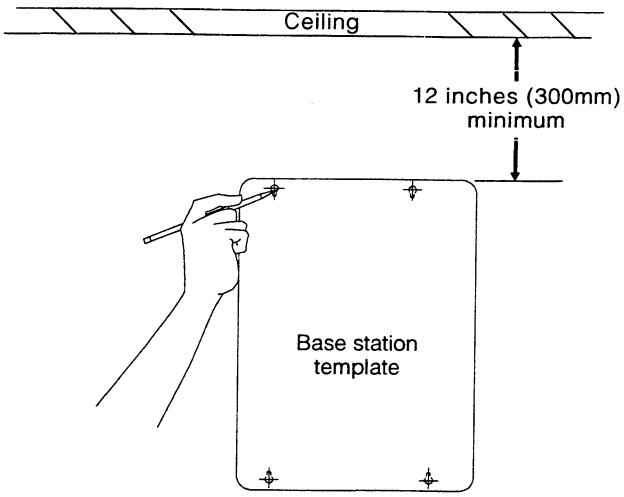

Mark the mounting surface through the four screw-hole targets on the template.

Figure 3.

- ❑ Remove the template from the wall and drill four ¼ inch (6mm) holes in the wall at the marked spots.

- ❑ Insert the enclosed screw anchors into the holes.

- ❑ Insert the four screws into the anchors, and tighten them until their plastic shoulder washers are secure against the anchors. See Figure 4.

- ❑ Position the base station over the screws so the screw heads go into the four holes on the back of the base station, and slide the base station downward to secure it in place

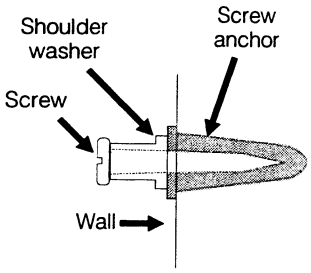

Screw anchor and screw with shoulder washer in wall

Figure 4.

B. Pulling Cables for System 2500D

NOTE: If an HME DU1 vehicle detector is being installed with the audio system, pull its cables with the cables for the audio system. Refer to the DU1 installation instructions. If replacing an existing system, use the existing cable to pull the new cables through the conduit, instead of the fish tape.

CAUTION: Do not attempt to use two pairs of wire in the same cable for speaker and microphone. Separate cables must be used for speaker and microphone or feedback may occur.

- ❑ Run fish tape from the drive-thru customer service area, inside the building, through the conduit to the speaker post or menu board. See Figure 5.
- ❑ Go outside to the speaker post or menu board, and mark the loose end of one of the CBL100 cables and its spool for later identification.
- ❑ Fasten the two CBL100 cables to the fish tape at the speaker post.
- ❑ Return to the customer-service area in the building, and pull the fish tape and cables through the conduit, into the building. Disconnect the cables from the fish tape and continue pulling enough of them through the conduit to reach the location where the base station will be mounted.
- ❑ Return to the speaker post and route the cables from the outside conduit to the inside of the speaker post or menu board, with approximately 3 feet (1 meter) of slack, and cut them. Mark the end of the cable from the marked spool for later identification.

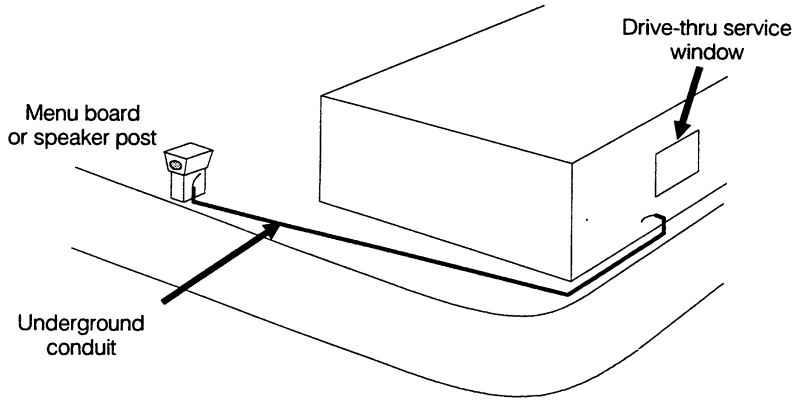

Pull cables through underground conduit from menu board or speaker post into the building.

Figure 5.

C. SP2000A Speaker/Microphone and SP2500LP Low-Profile Speaker Installation

This section describes installation of the SP2000A Speaker/Microphone and the SP2500LP Low-Profile Speaker. The SP2000A serves as the outside microphone (inbound from customer) in the speaker post or menu board, and the SP2500LP is the outside speaker (outbound to customer).

These instructions are for a typical installation. Specific installation requirements may vary.

1. Determining the best locations for the SP2000A and SP2500LP

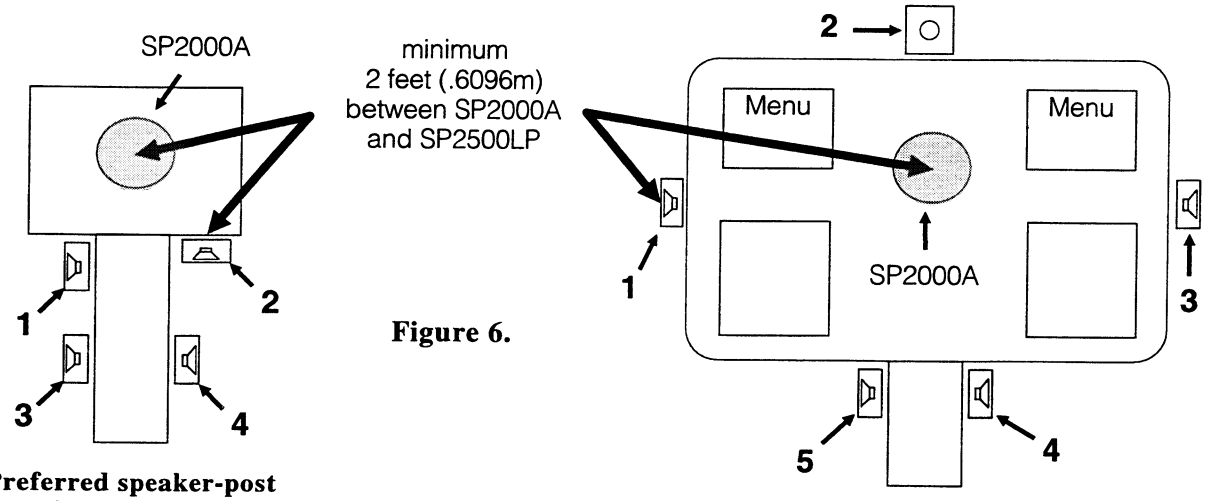

Figure 6.

Preferred speaker-post locations for SP2000A and SP2500LP (1 - 4)

Preferred menu-board locations for SP2000A and SP2500LP (1 - 5)

In order to avoid audio feedback, the SP2500LP must be mounted at least 2 feet (610 mm) from the SP2000A. Positioning of the two units is critical. The SP2000A must be mounted inside the speaker post or menu board, behind the speaker grill. It should be installed first, so it can be positioned where the customer will be speaking directly into it. The SP2500LP can then be installed anywhere around the SP2000A, inside or outside (outside is preferred) the cabinet, as long as it is at least 2 feet (610 mm) from the SP2000A, center-to-center. This distance may vary according to specific conditions.

If the SP2500LP is installed inside the cabinet, a set of holes needs to be drilled in the cabinet at the desired location. A drill and drill bits will be required (See page 12).

The SP2500LP should be positioned further back than the SP2000A, so it is further from the customer. NOTE: Try the system before permanently mounting the SP2500LP. If it is not positioned correctly, feedback may occur. If this happens, reposition the SP2500LP at other locations around the 2000A until the feedback disappears. Possible locations are shown in Figure 6.

2. Installing the SP2000A Speaker/Microphone

Drill four ⅛ inch (3.2 mm) pilot holes at the spots shown on Figure 7 A, in the flange of the SP2000A.

Hold the SP2000A mounting template (see last page of this manual) against the outside of the speaker grill on the speaker post or menu board, at the desired location for mounting the SP2000A Speaker/ Microphone. With a pencil or other sharp object, mark the speaker grill through the four drill-hole targets on the template. Drill a 3/16 inch (4.8 mm) hole at each of the marked spots.

Hold the SP2000A flush against the inside of the speaker grill, with the four pilot holes on its flange directly over the four holes drilled through the grill speaker. From the outside of the speaker grill, drill the four enclosed self-tapping screws through the drilled holes in the speaker grill and through the SP2000A flange at each pilot hole, as shown in Figure 7 B.

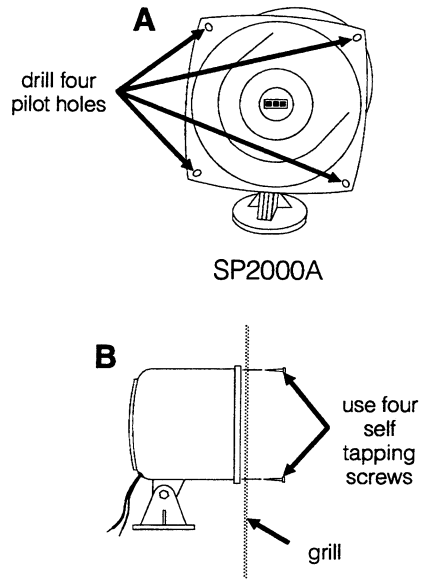

Installing the SP2000A

Figure 7.

CAUTION: Never run high-voltage cables in the same conduit with audio or loop cables.

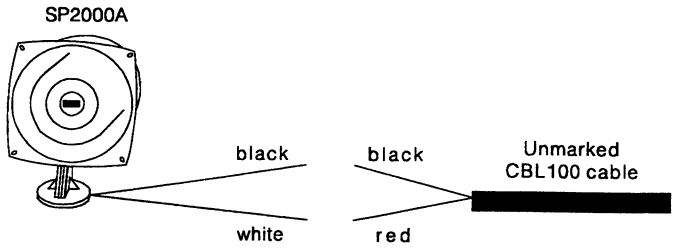

SP2000A cable connections

Figure 8.

Connect the red wire from the unmarked CBL100 cable to the white SP2000A wire, and the black cable wire to the black SP2000A wire. (Figure 8.) Do not connect the drain wire. Solder the connection and cover it with electrical tape or shrink tubing. Solder all splices to prevent deterioration of performance.

3. Installing the SP2500LP Low-Profile Speaker

a. Opening the SP2500LP Speaker

Use a flat blade screwdriver, or similar tool, to pry the rear panel away from the speaker box at the four points shown in Figure 9. Remove the rear panel from the speaker box as shown in Figure 10.

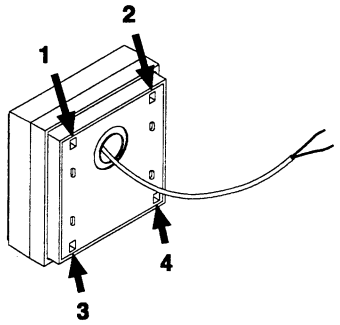

Figure 9. Pry rear panel away from speaker box at the four points shown

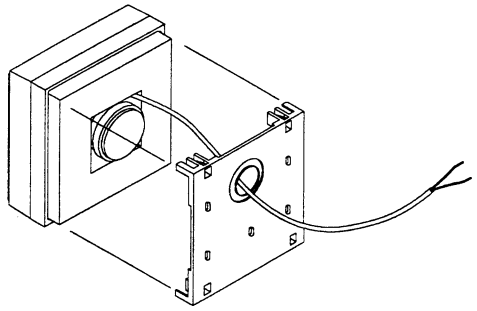

Figure 10. Remove rear panel from speaker box

b. Mounting the SP2500LP Speaker

Keep in mind that the SP2500LP must be mounted at least 2 feet (610 mm) from the SP2000A, center-to-center.

- **If outside menu board or speaker post:**

Hold the rear panel of the SP2500LP flat against the surface of the speaker post or menu board, at the desired mounting location, as shown in Figure 11. Use a pencil to mark the speaker post through the wire hole in the panel. Remove the panel and set it aside. Drill a ¼ inch (6 mm) wire hole at the marked location.

Hold the rear panel against the surface, in the same position as before, and screw the four enclosed self-tapping screws through each of the screw holes on the panel, into the speaker post or menu board as shown in Figure 12.

Route the cable from the back of the speaker through the wire hole in the rear panel of the speaker assembly, into the speaker post. Close the speaker assembly box by pressing it tightly against the rear panel.

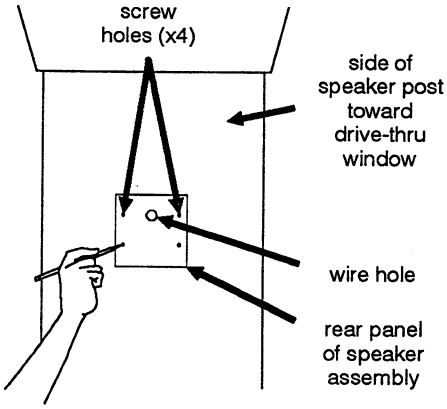

Figure 11. Mark speaker post through holes in rear panel of SP2500LP Speaker assembly

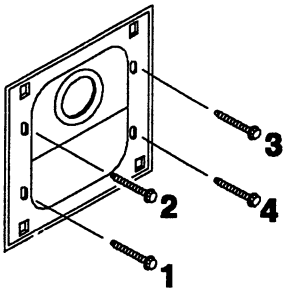

Figure 12. Screw the self-tapping screws through holes in rear panel of SP2500LP Speaker assembly

❑ If inside menu board or speaker post:

Hold the enclosed SP2500LP mounting template (see last page of this addendum) against the outside of the speaker post or menu board cabinet, adjacent to where the SP2500LP Speaker will be mounted inside the cabinet. With a pencil or other sharp object, mark the cabinet through each of the twenty five drill-hole targets on the template. Remove the template.

Drill a 5/32 inch (4 mm) hole through the cabinet at each of the four outer marks, as shown on the template. Drill a 3/8 inch (8 mm) hole through the cabinet at each of the twenty one remaining marks.

Remove and discard the four Phillips (cross point) screws from the metal face plate on the SP2500LP, as shown in Figure 13, A.

Hold the SP2500LP with its metal face plate flush against the inside of the cabinet, with the four screw holes on its face plate directly behind the four 5/32 inch (4 mm) holes drilled in the cabinet.

Screw the four round-headed screws provided with the SP2500LP, through the four 5/32 inch (4 mm) holes in the cabinet, and into the metal plate inside the cabinet. Tighten the screws enough to secure the unit to the cabinet.

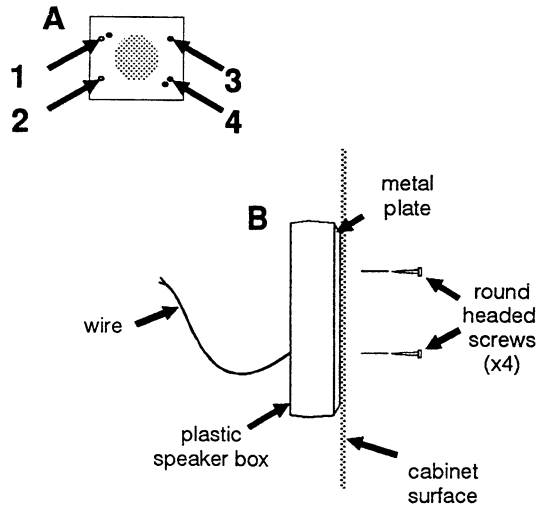

Figure 13. Remove and discard the screws shown in A, above. Use the round-headed screws provided to mount the SP2500LP Speaker on the inside of the menu board or speaker post cabinet, as shown in B.

c. SP2500LP Cable Connections

Inside the speaker post or menu board, connect the green and white wires of the marked CBL100 cable to the wires coming from the speaker as shown in Figure 14. Do not connect the drain wire. Solder the connection and cover it with electrical tape or shrink tubing.

IMPORTANT: Use separate cables for speaker and microphone, or feedback may occur.

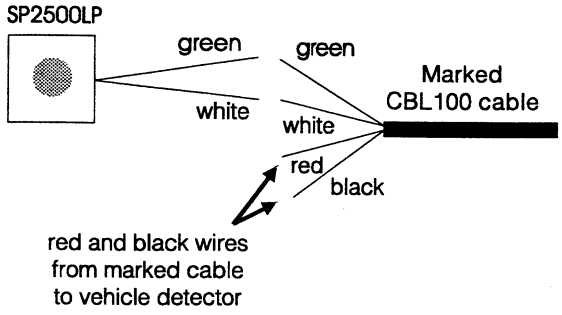

SP2500LP cable connections

Figure 14.

D. Installing the SP2000D Full-Duplex Speaker

Open the speaker post or menu board cabinet and determine where the SP2000D will be mounted. Be certain there is enough clearance in all directions for the speaker to fit vertically, with its front flush against the speaker grill. (The speaker should be installed vertically if possible.) See Figure 15. It should be at least 42 inches (1 meter) above the surface of the drive-thru lane, in order to avoid vehicle engine noise. Modifications may be required to the area where the SP2000D will be located, such as:

- removing metal or plastic boxes or other obstructions that may interfere with correctly positioning the speaker
- drilling extra holes in a speaker-grill surface to prevent muffling of sound
- straightening of dented or bent grill to assure flush mounting of speaker
- adding extra foam around front edges of speaker

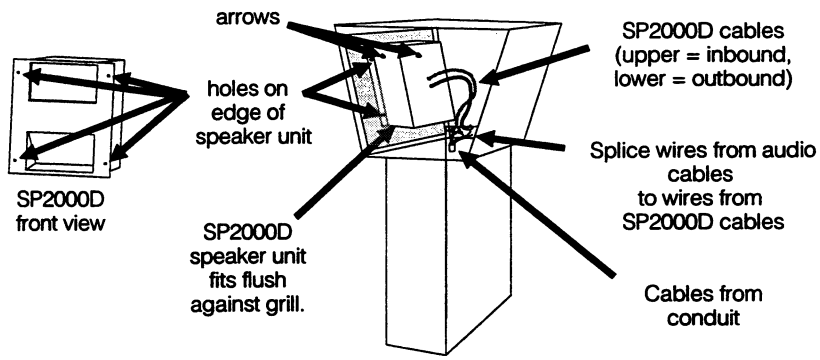

Typical 2000D installation in speaker post

Figure 15.

- ❑ Hold the front of the SP2000D centered against the speaker grill. Drill four ⅛ inch (3mm) holes in the grill through the holes on the edges of the speaker unit.

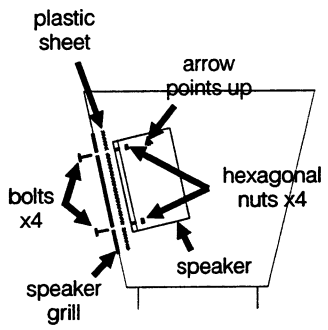

Typical placement of SP2000D speaker in speaker post

Figure 16.

- ❑ Place the plastic sheet against the inside of the speaker grill. Trim the plastic sheet as needed to align the four holes in the sheet with the four holes in the grill.
- ❑ From the front of the grill, insert the enclosed bolts through the four holes in the grill and the plastic sheet.
- ❑ Inside the speaker post or menu board, mount the speaker against the speaker grill and plastic sheet, so the four bolts go through the four holes on the front edges of the speaker unit. Be certain the arrow on the side of the SP2000D is pointing up. Screw the enclosed hexagonal nuts onto the four bolts, securing the speaker unit against the back of the speaker grill. See Figure 16.
- ❑ Locate the two cables on the back of the SP2000D. The inbound (upper) audio cable, from **the microphone, has a red and a black wire and a bare shield wire** extending from its end. The outbound (lower) audio cable, from **the speaker, has a green and a white wire** extending from its end. Splice together the black, red and shield wires from the upper cable with the corresponding wires of the unmarked CBL100 cable coming through the conduit. Splice together the green and white wires from the lower cable with the corresponding wires of the marked CBL100 cable. **Solder all splices and wrap them with electrical tape.** See Figure 17.
- ❑ Go to G, on page 18.

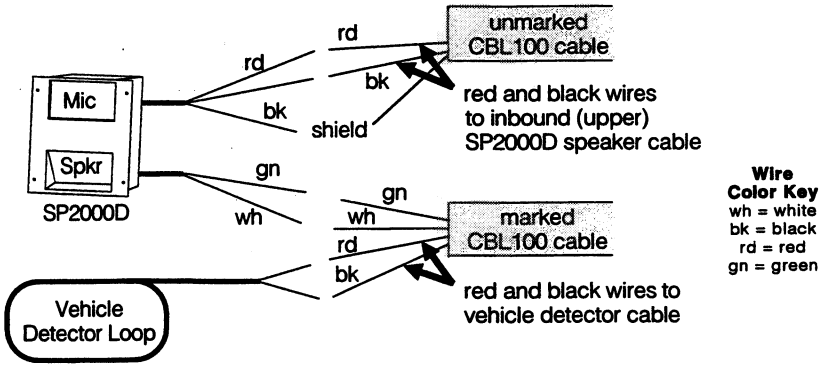

Vehicle detector connections

Figure 17.

E. Installing the System 2510 Microphone

- ❑ Go outside the order-taker booth. Mark the outside of the right window mullion at midpoint, and drill a ½ inch (13mm) hole at the mark. See Figure 18. a.
- ❑ Find the microphone assembly. Insert the microphone into the hole and use its bracket as a template to mark the screw holes.
- ❑ Drill two ⅛ inch (3mm) holes (#31 drill bit) at the marks.
- ❑ Remove the window and check for a pre-drilled hole in the sill, directly below the point at which the mullion would meet the sill. If there is no hole, drill a ¾ inch (19mm) hole for the microphone cable.
- ❑ Place the rubber gasket over the microphone hole on the inside of the window mullion.
- ❑ Run fish tape from the pull-box inside the order-taker booth, through the hole in the sill, the mullion and the ½ inch (13mm) hole. See Figure 18. b.
- ❑ Go outside the booth. Attach the fish tape to the free end of the microphone cable. Pull the cable through the mullion into the order-taker booth, to the base station.
- ❑ Go outside and insert the microphone through the rubber gasket and into the window mullion. Attach the microphone assembly to the mullion with the screws provided.

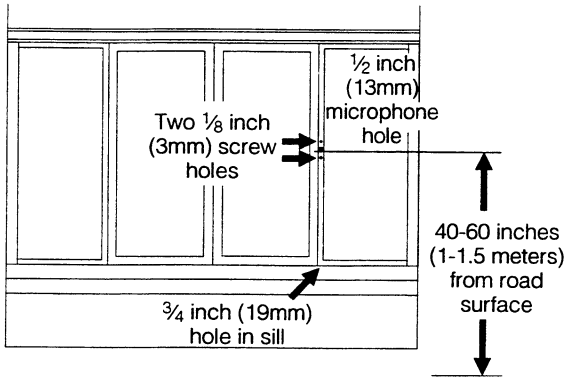

a. Service window, front (outside) view

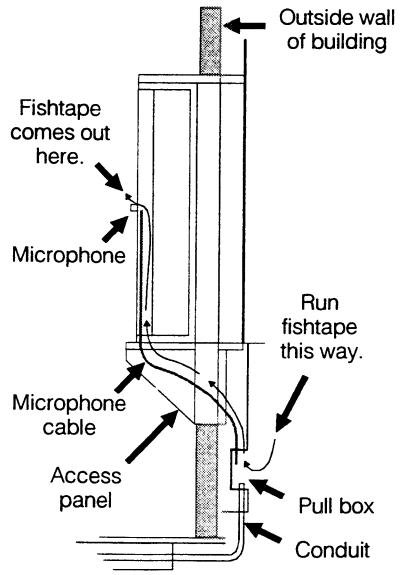

b. Service window, side view

System 2510 microphone connections

Figure 18.

F. Wiring Diagrams

Use the wiring diagrams listed below to connect the components of the system being installed. If you have further questions regarding equipment installation and connections, call the HME Customer Support Department at 1-800-848-4468.

Guide for Resetting Pins on S2 Switch in Base Station (8-pin switches)		
Open the base station cabinet by pressing down on the two catches on the top of the cabinet, and slowly pulling the cover toward you. To change the function of the MM100 Monitor/Grill Speaker, reset the pins on the S2 switch in the base station as shown below.		
Pin #	**ON** Position	**OFF** Position
1	Mute channel "B" audio in grill speaker	Listen to channel "B" audio in grill speaker
2	Mute channel "A" audio in grill speaker	Listen to channel "A" audio in grill speaker
3	Listen to inbound audio in grill speaker	Mute inbound audio in grill speaker
4	Mute vehicle present tone in grill speaker	Listen to vehicle present tone in grill speaker
5, 6 & 7	Subaudible tone selection (factory preset) **T7** OFF/OFF/OFF; **T8** OFF/OFF/ON; **T10** ON/OFF/ON	
8	Not used	

Guide for Resetting Pins on S2 Switch in Base Station (12-pin switches)		
Open the base station cabinet by pressing down on the two catches on the top of the cabinet, and slowly pulling the cover toward you. To change the function of the MM100 Monitor/Grill Speaker, reset the pins on the S2 switch in the base station as shown below.		
Pin #	**ON** Position	**OFF** Position
1, 2 & 3	Full or half-duplex select (factory preset) * **Full-duplex** OFF/OFF/ON; **Half-duplex** OFF/ON/OFF	
4	Mute channel "B" audio in grill speaker	Listen to channel "B" audio in grill speaker
5	Mute channel "A" audio in grill speaker	Listen to channel "A" audio in grill speaker
6	Listen to inbound audio in grill speaker	Mute inbound audio in grill speaker
7	Mute vehicle present tone in grill speaker	Listen to vehicle present tone in grill speaker
8, 9 & 10	Subaudible tone selection (factory preset) **T7** OFF/OFF/OFF; **T8** OFF/OFF/ON; **T10** ON/OFF/ON	
11 & 12	Not used	

*If using the S2, pin #1 may be turned **OFF** to increase outbound audio, or turned **ON** to reduce feedback.

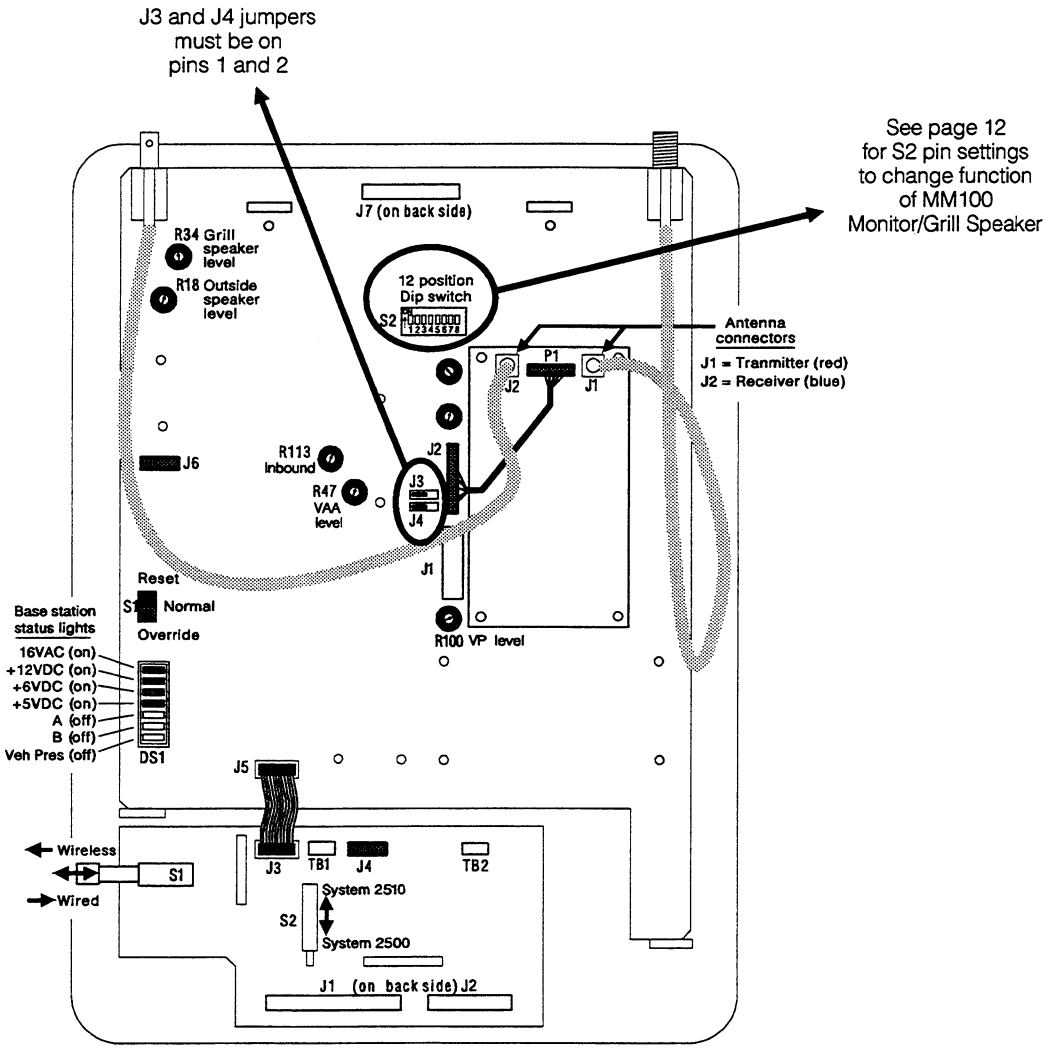

Full-Duplex System 2500D Circuit Board Diagram

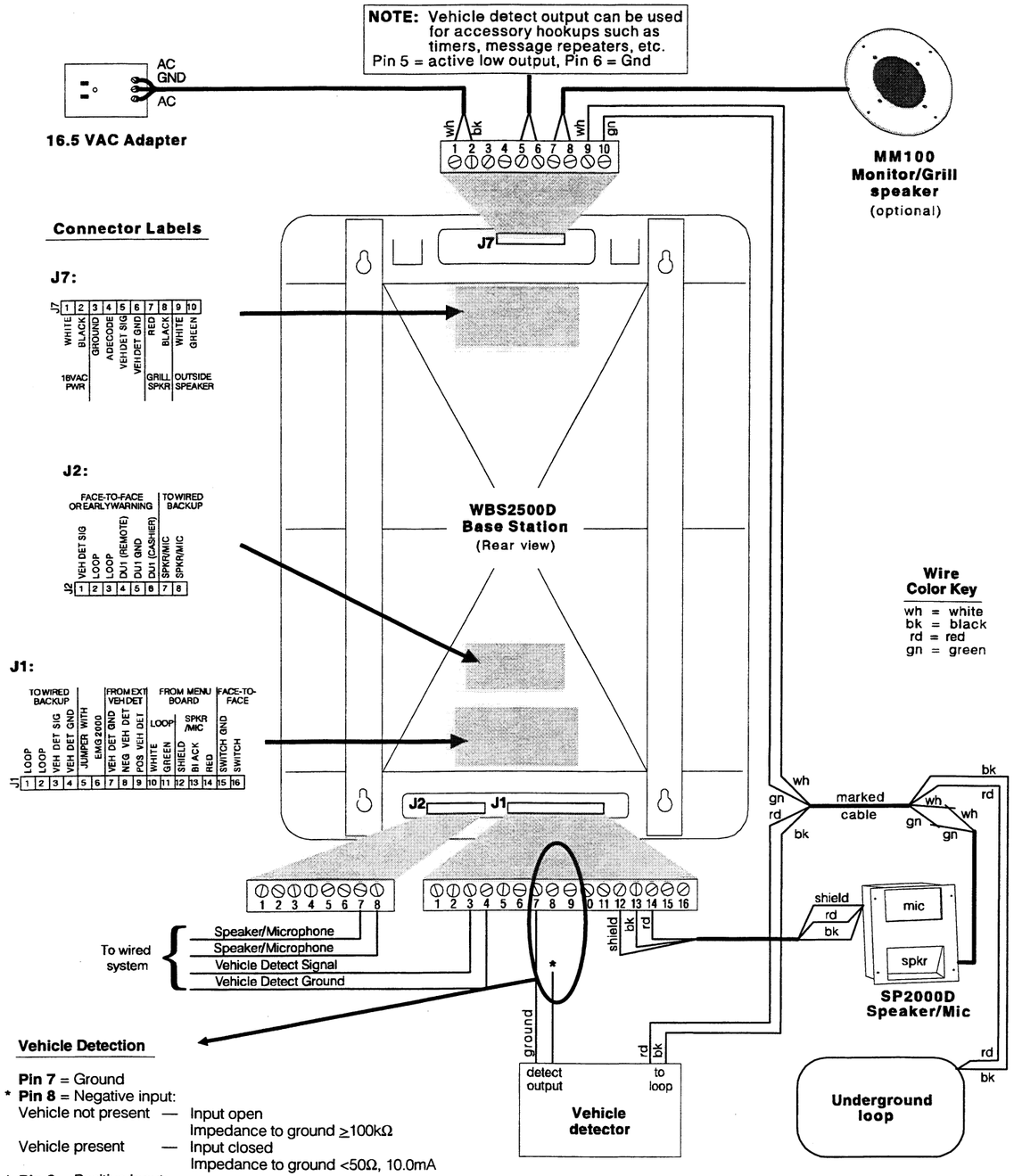

Vehicle Detection

Pin 7 = Ground
* **Pin 8** = Negative input:
Vehicle not present — Input open
Impedance to ground ≥100kΩ
Vehicle present — Input closed
Impedance to ground <50Ω, 10.0mA
* **Pin 9** = Positive input:
Vehicle not present — 0.0V ±0.4V, 0mA
Vehicle present — ≥+4V, 0.33mA
≤+48V, 4.7mA

* **NOTE:** Either pin 8 or pin 9 will be used, depending on whether the vehicle detector provides a positive or negative output.

Full-Duplex System 2500D Wiring Diagram (with SP2000D)

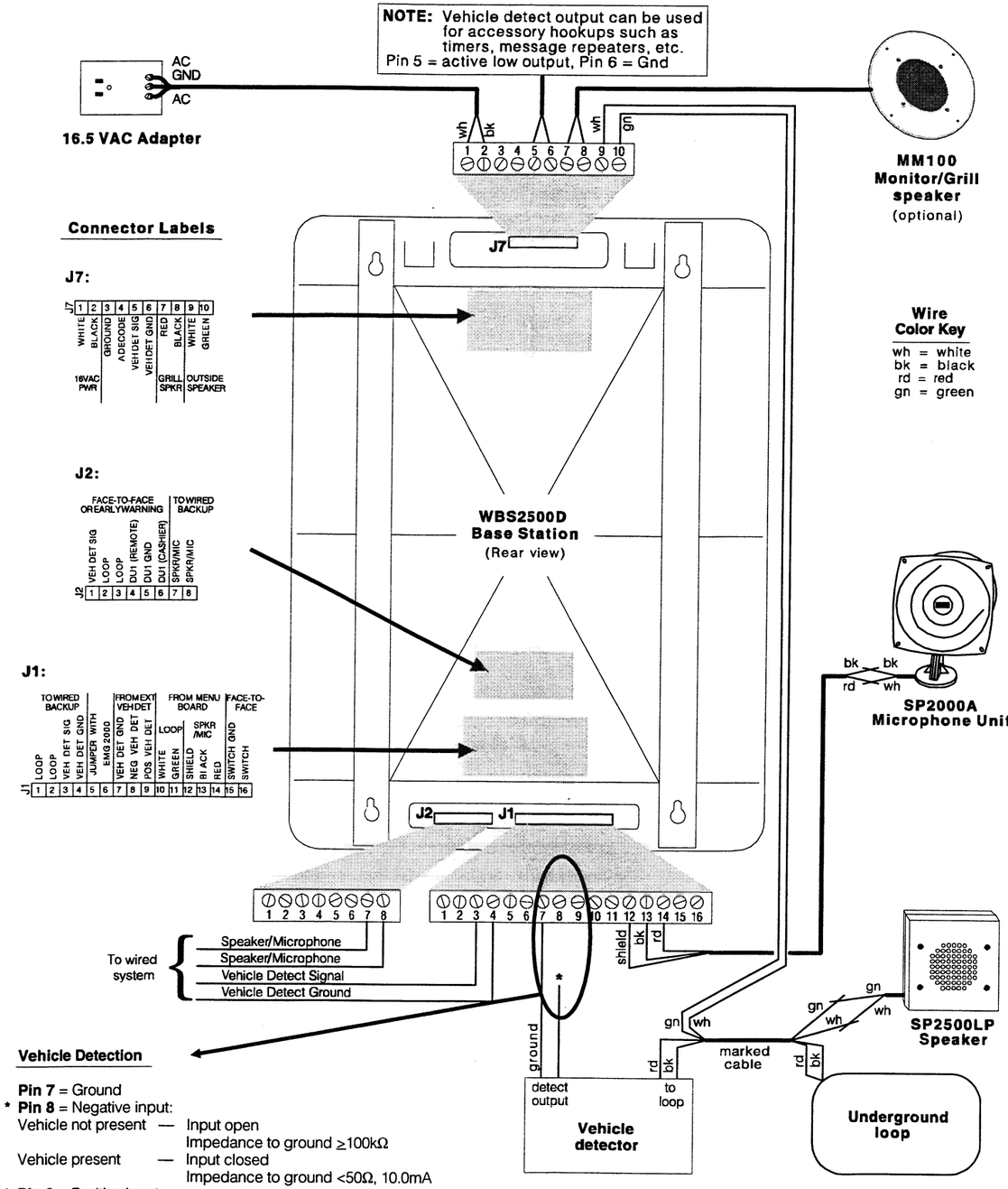

Vehicle Detection

Pin 7 = Ground
* **Pin 8** = Negative input:
Vehicle not present — Input open
Impedance to ground ≥100kΩ
Vehicle present — Input closed
Impedance to ground <50Ω, 10.0mA
* **Pin 9** = Positive input:
Vehicle not present — 0.0V ±0.4V, 0mA
Vehicle present — ≥+4V, 0.33mA
≤+48V, 4.7mA

* **NOTE:** Either pin 8 or pin 9 will be used, depending on whether the vehicle detector provides a positive or negative output.

Full-Duplex System 2500D Wiring Diagram (with SP2000A and SP2500LP)

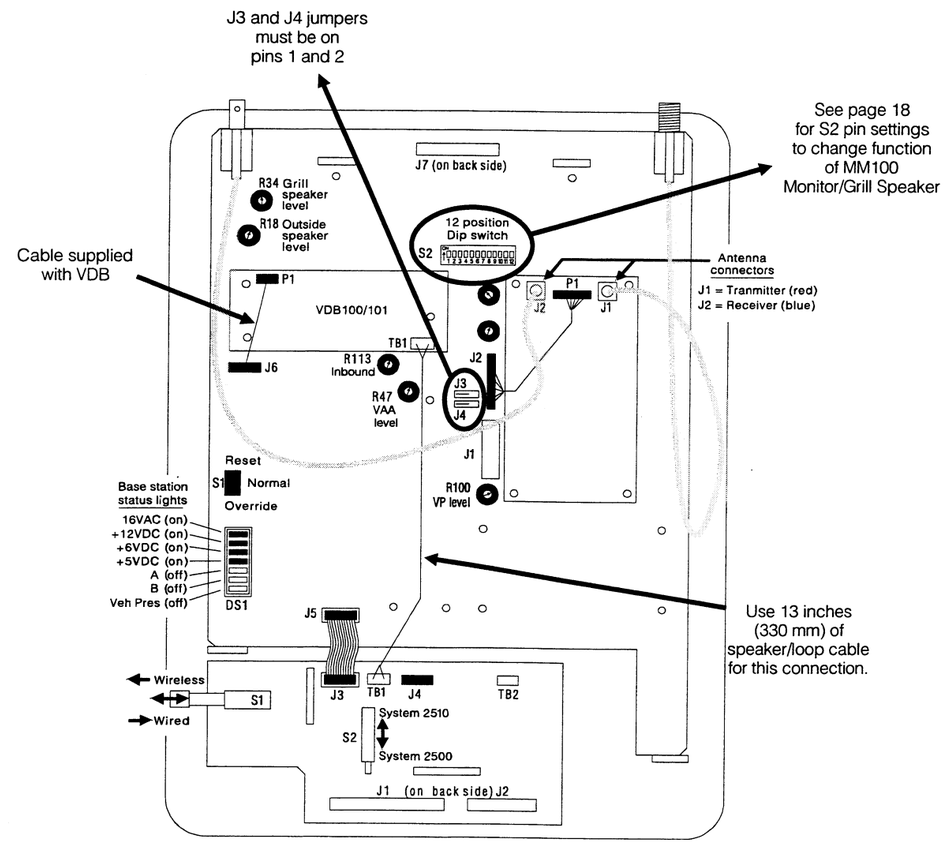

Full-Duplex System 2500D
with VDB100/101
Circuit Board Diagram

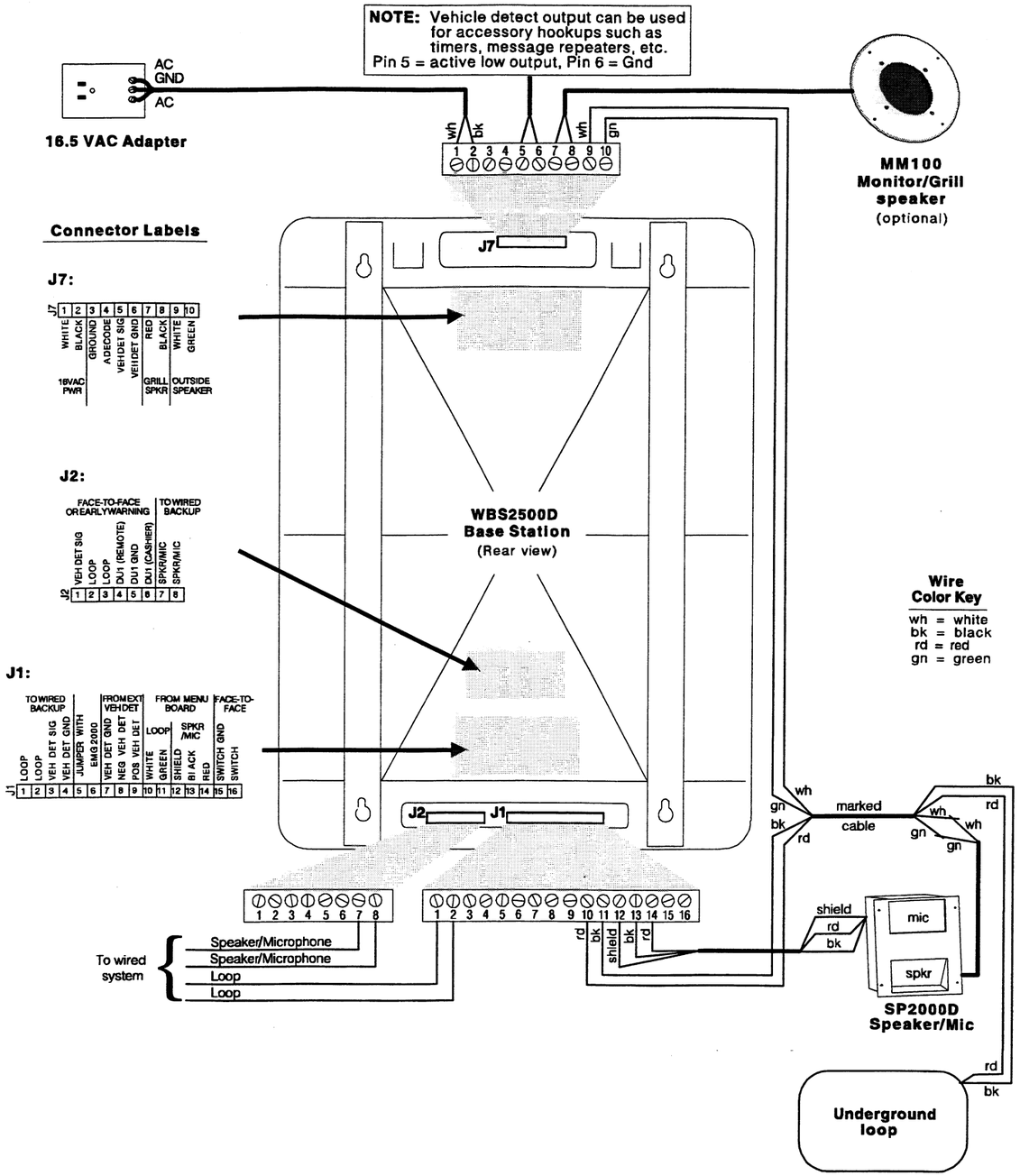

Full-Duplex System 2500D with VDB100/101 Wiring Diagram (with SP2000D)

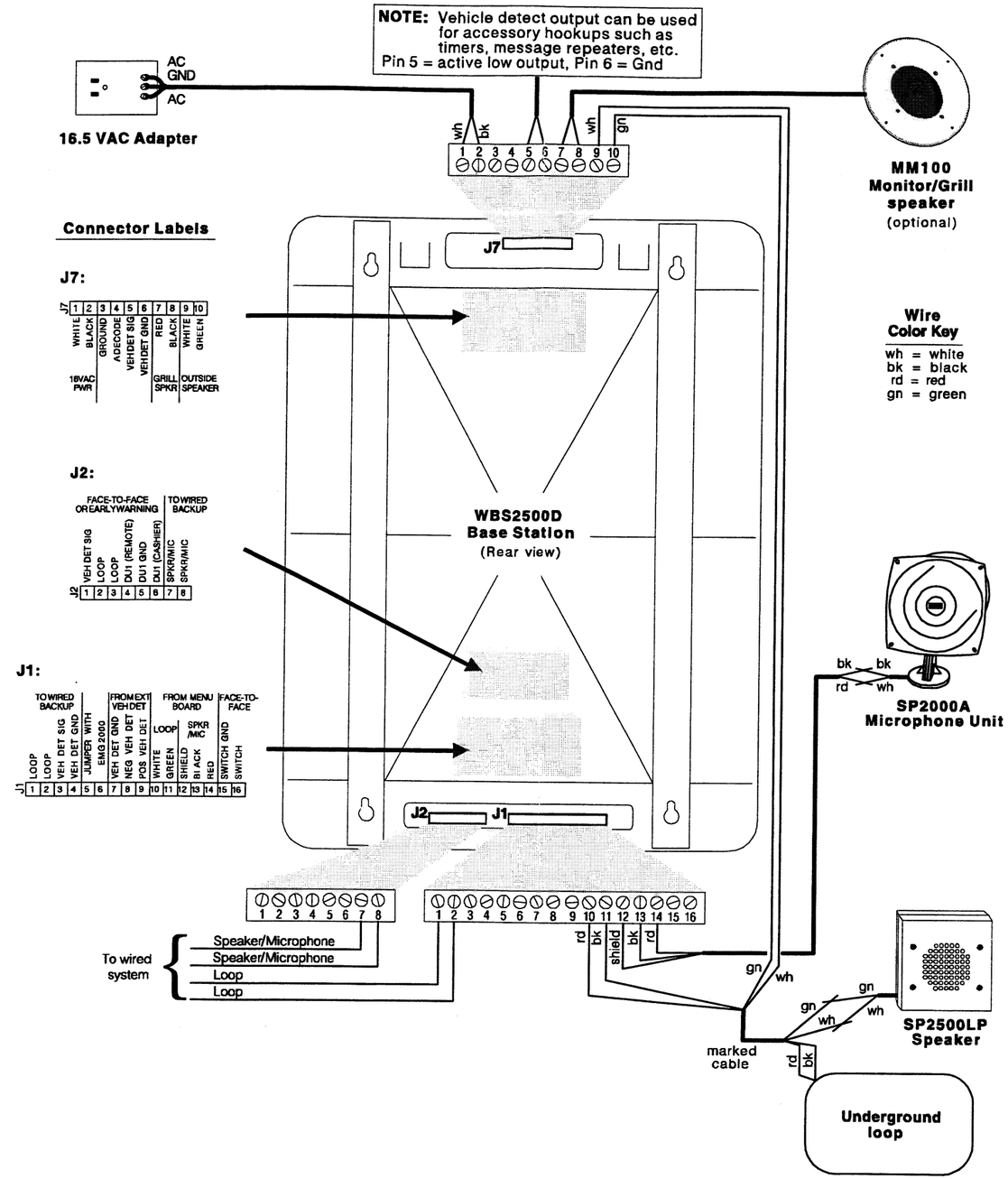

Full-Duplex System 2500D with VDB100/101 Wiring Diagram (with SP2000A and SP2500LP)

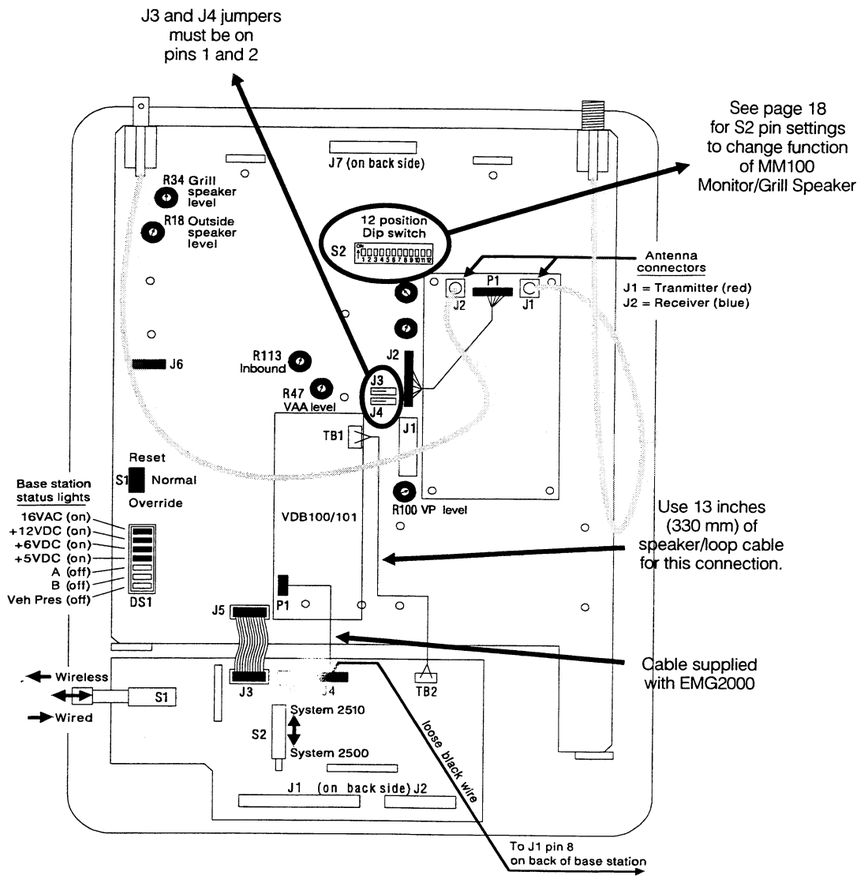

Full-Duplex System 2500D
with VDB100/101 and EMG2000
Circuit Board Diagram

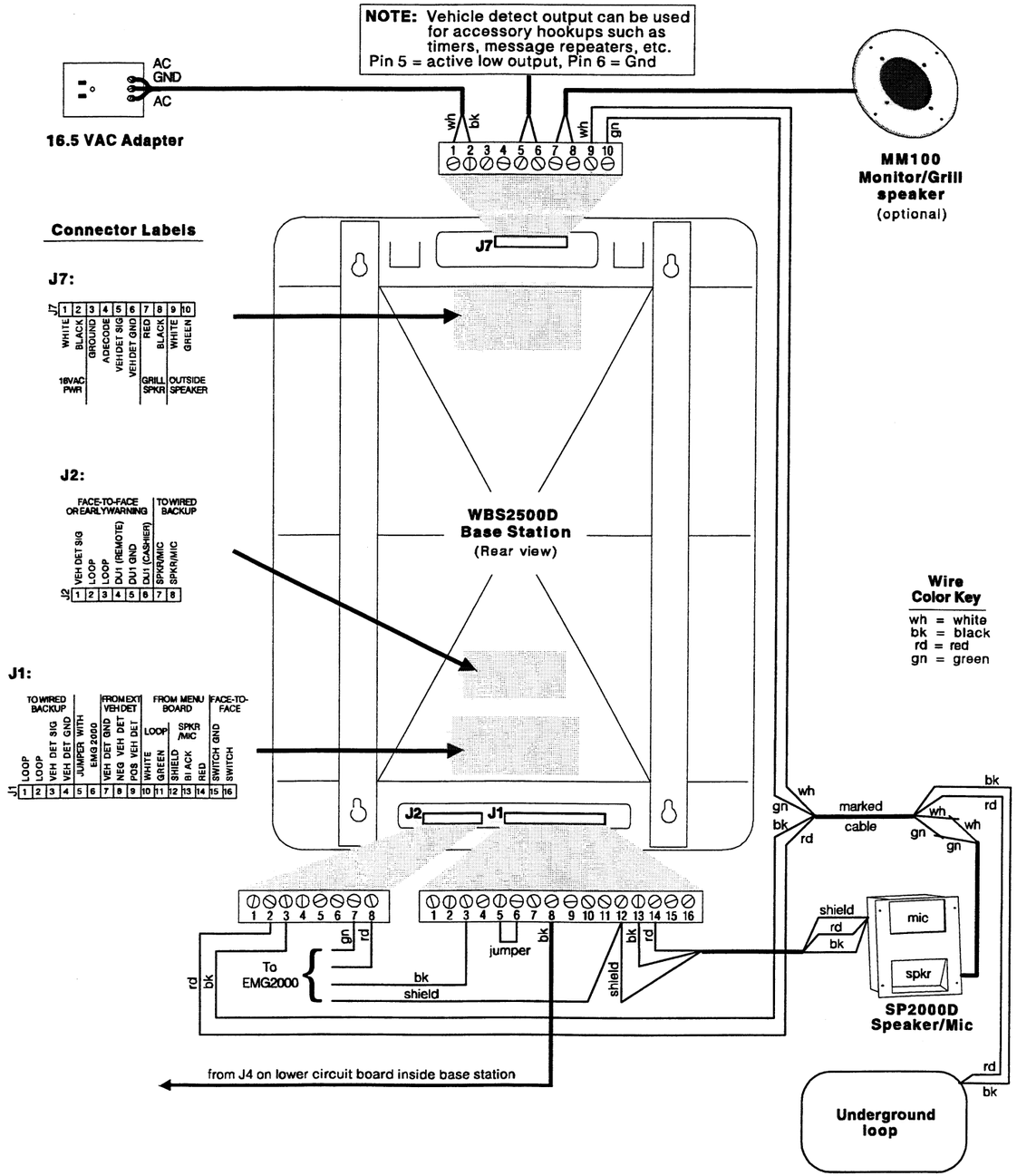

Full-Duplex System 2500D with VDB100/101 and EMG2000 Wiring Diagram (with SP2000D)

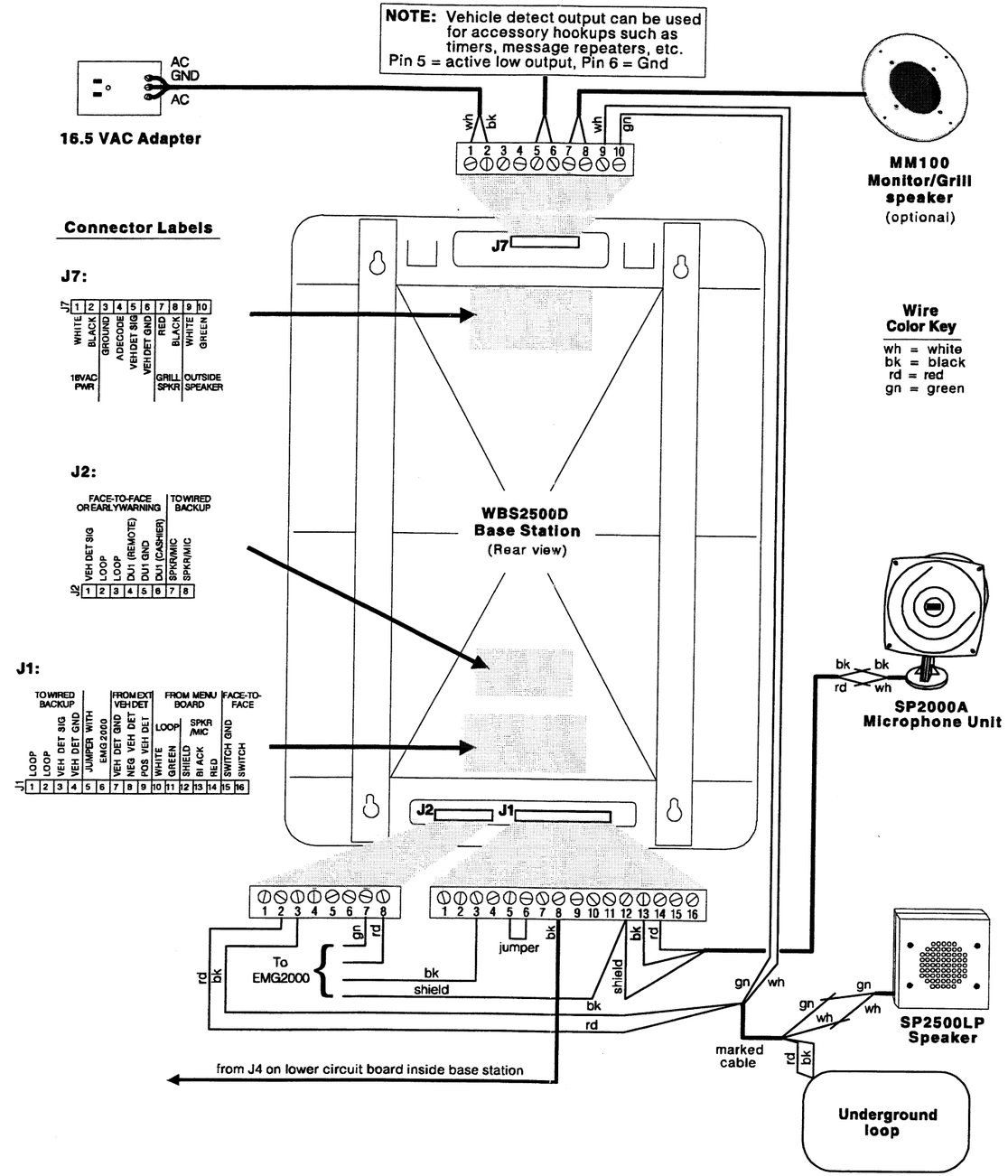

Full-Duplex System 2500D with VDB100/101 and EMG2000 Wiring Diagram (with SP2000A and SP2500LP)

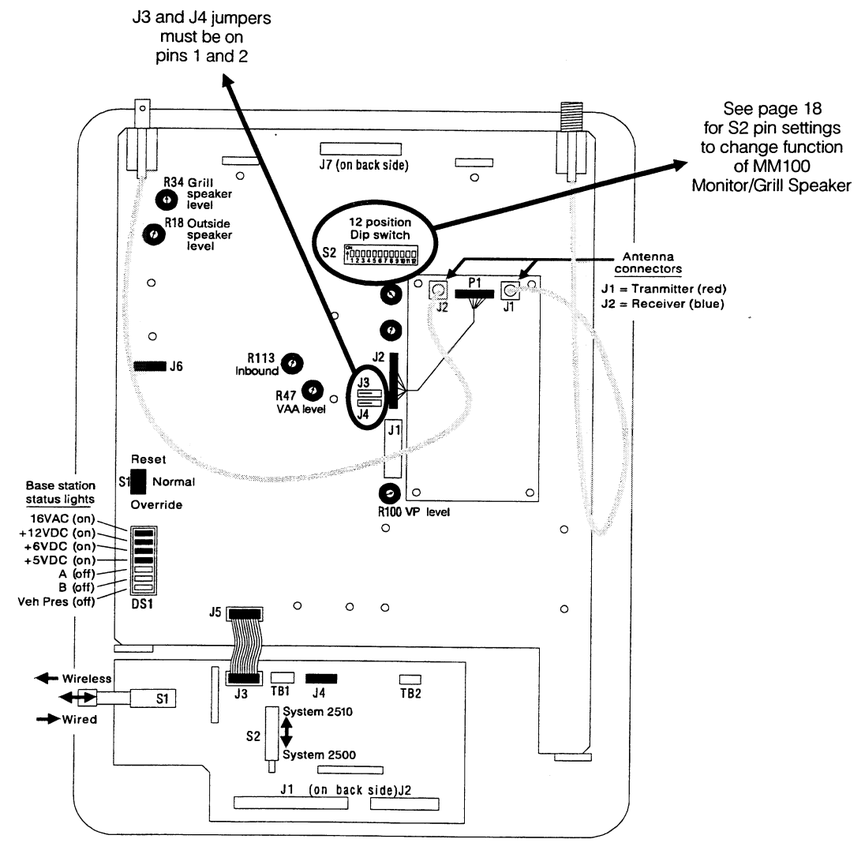

Full-Duplex System 2500D with DU1/DU2 and EMG2000 Circuit Board Diagram

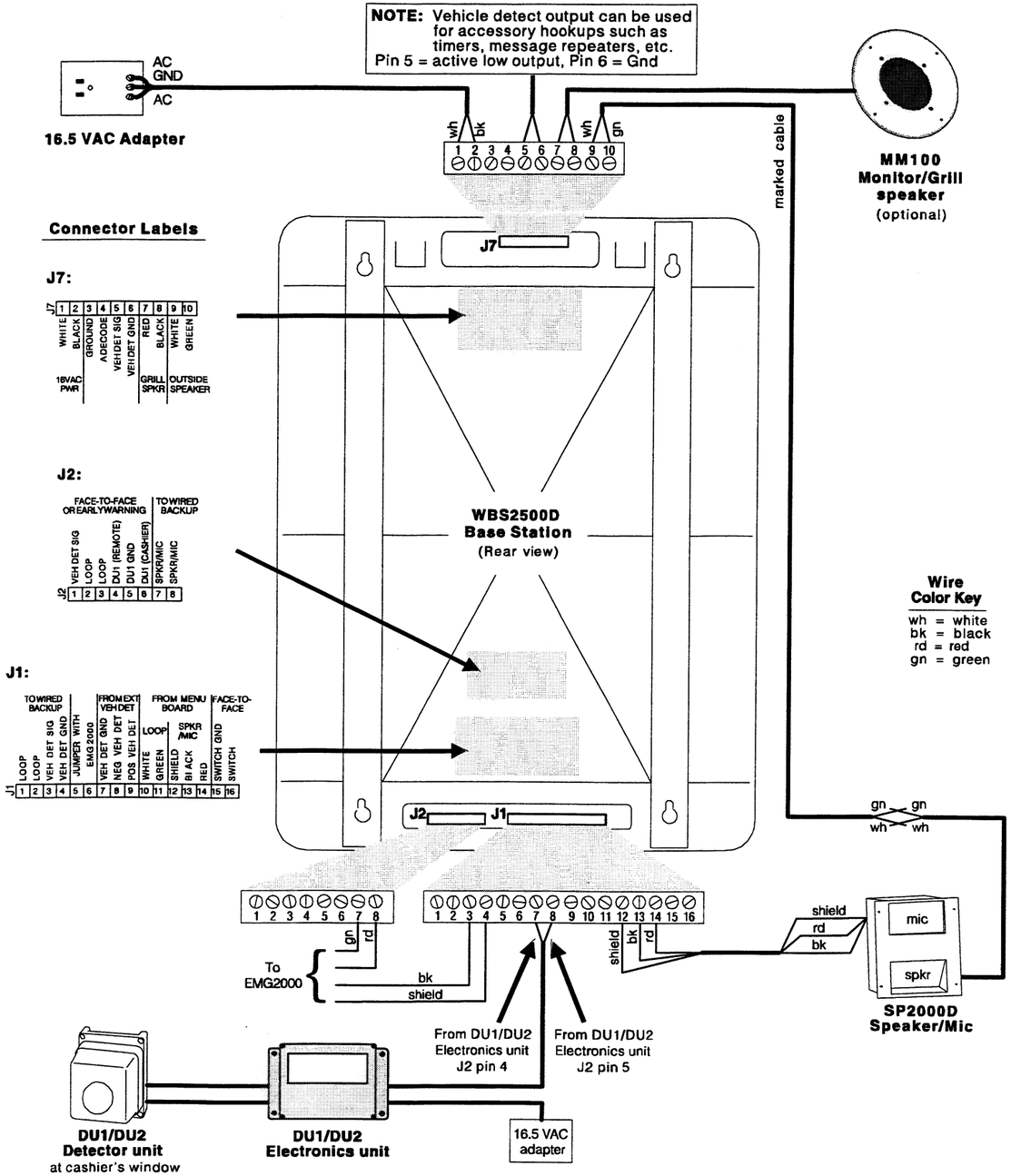

Full-Duplex System 2500D with DU1/DU2 and EMG2000 Wiring Diagram (with SP2000D)

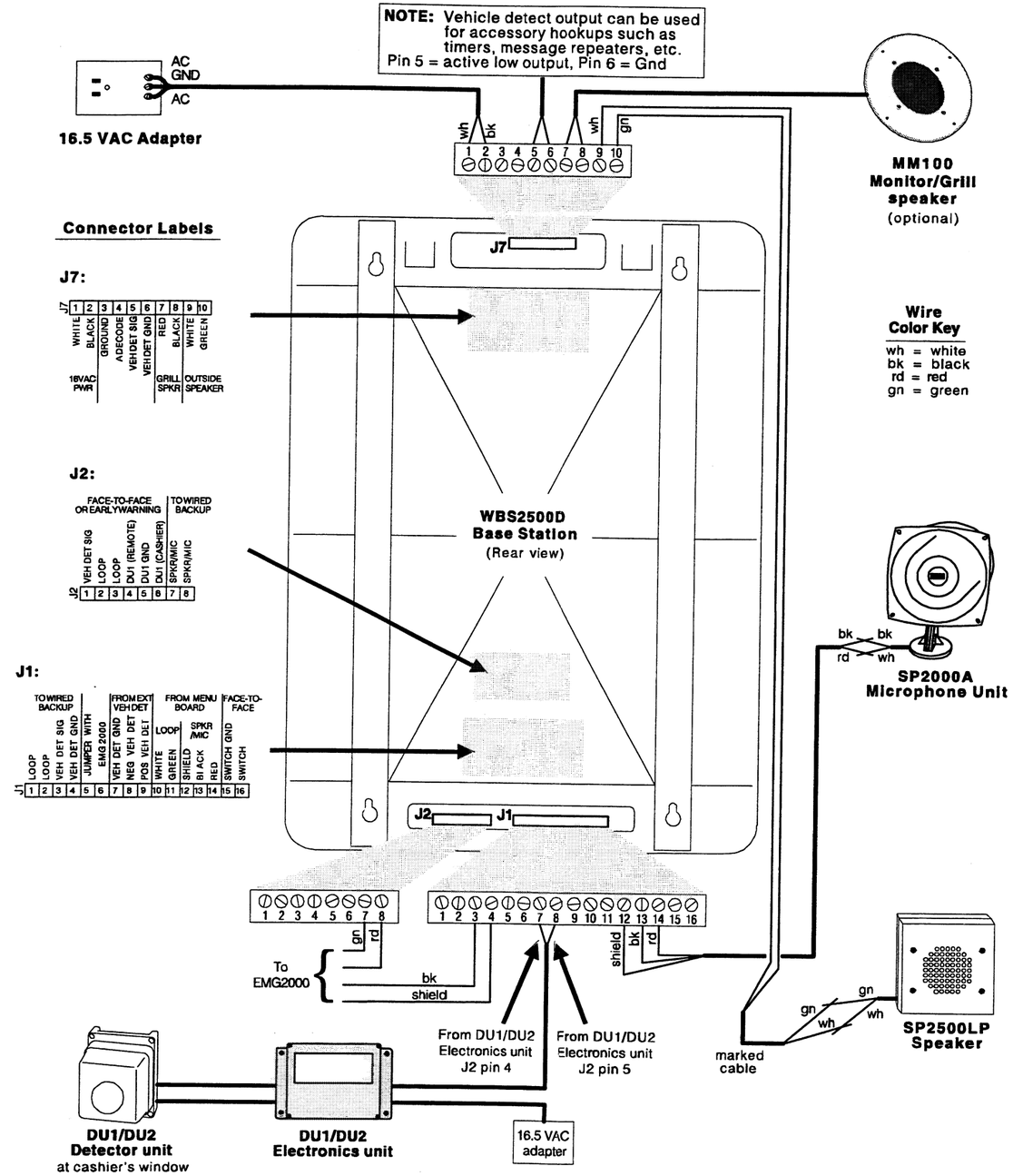

Full-Duplex System 2500D with DU1/DU2 and EMG2000 Wiring Diagram (with SP2000A and SP2500LP)

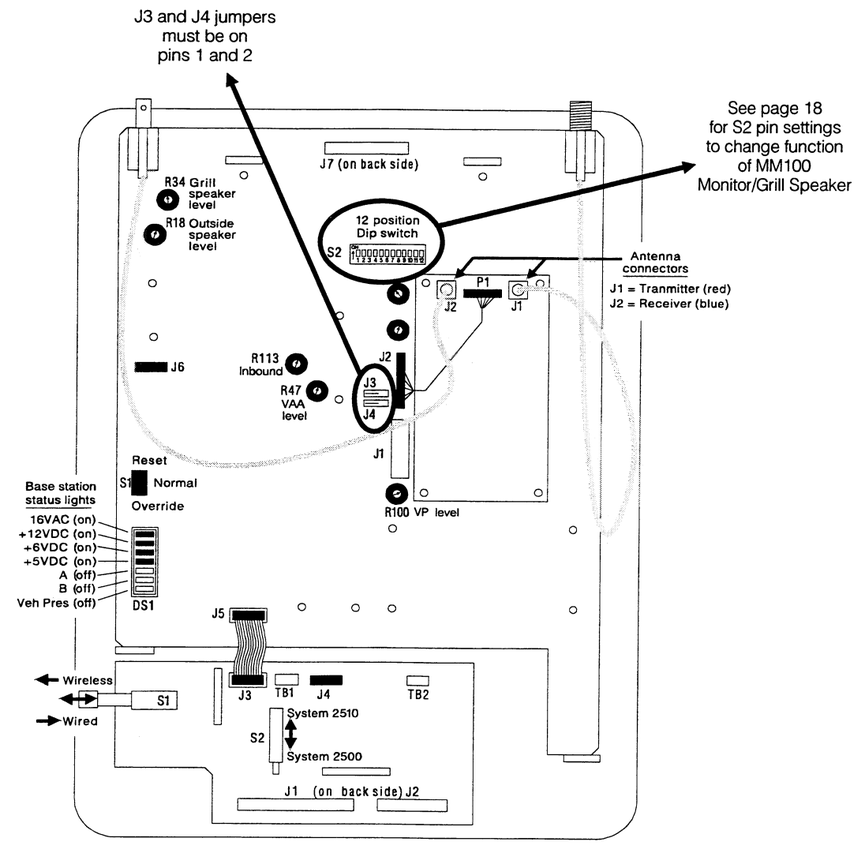

Half-Duplex System 2500D
Circuit Board Diagram

(Front/Inside view of System 2500D base station)

(Rear view of System 2500D base station)

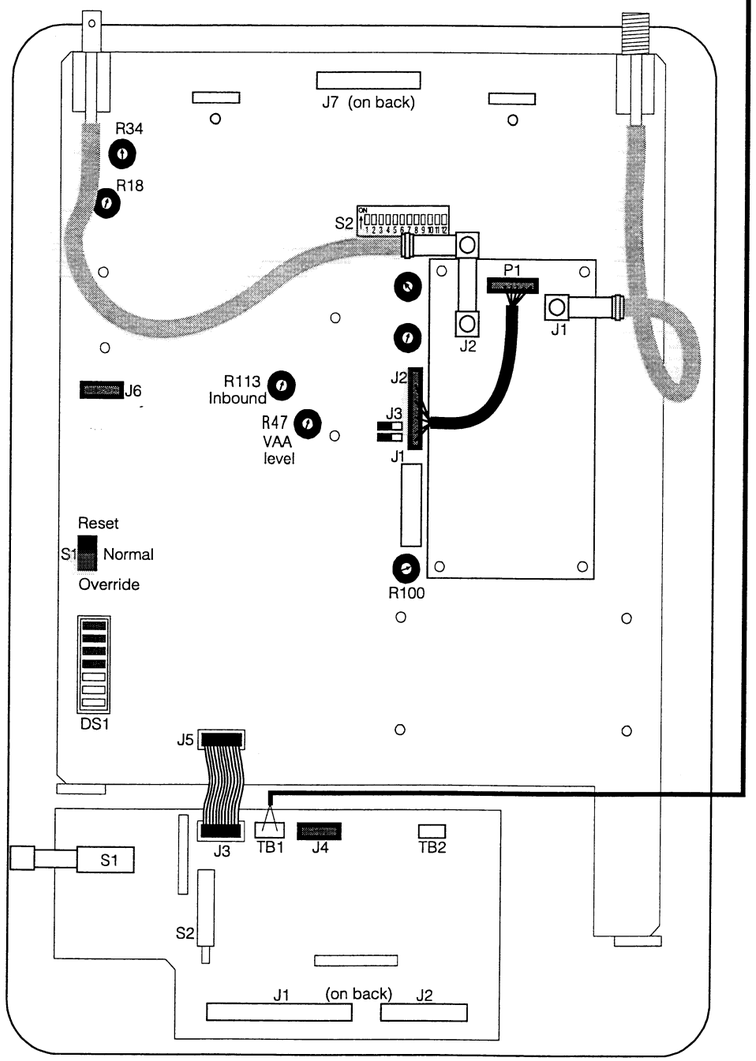

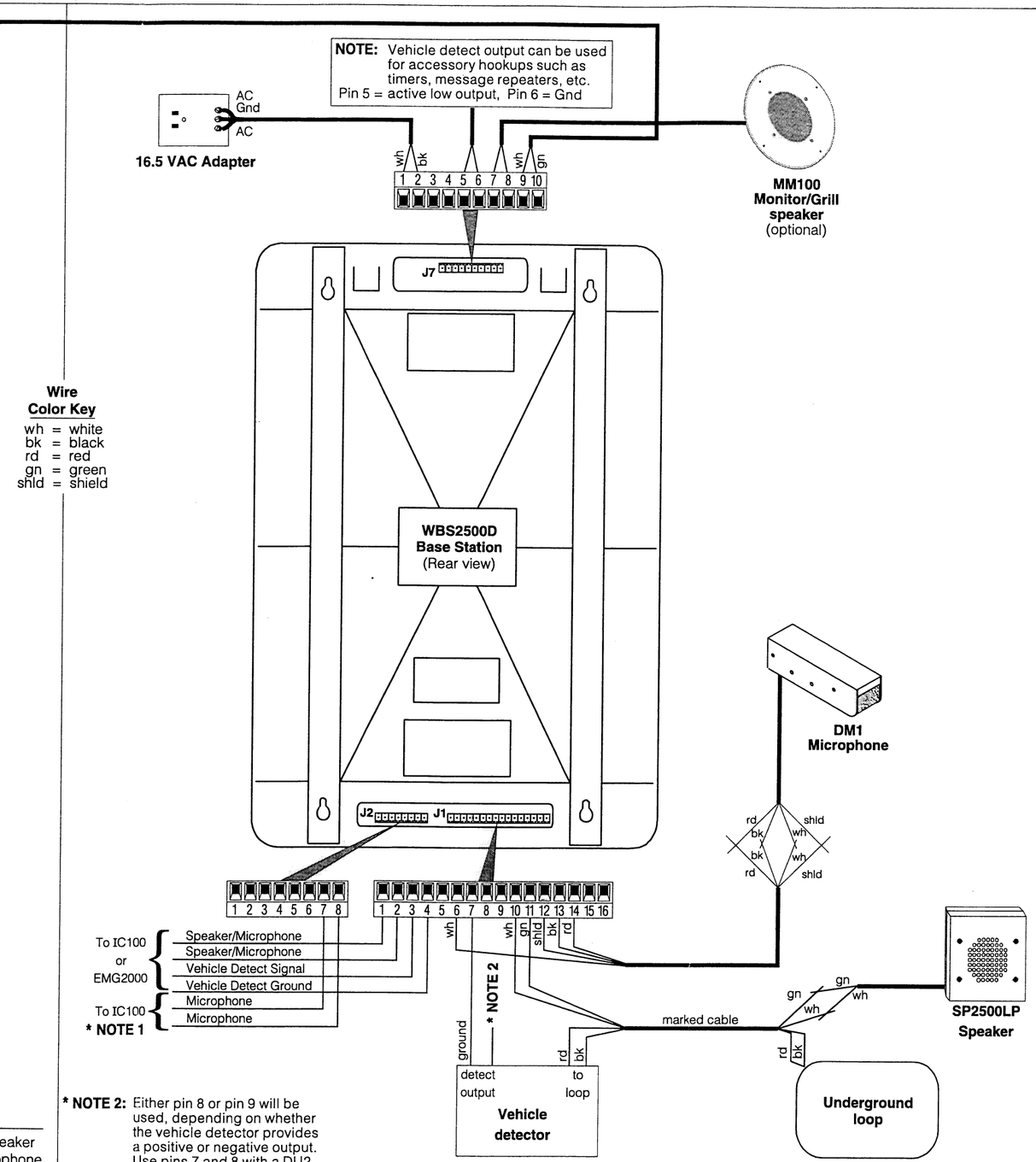

Wire
Color Key
wh = white
bk = black
rd = red
gn = green
shld = shield

*** NOTE 1:** When interfacing to IC100 wire as shown

From 2500	To IC100
J1 pins 1 and 2	J11 pins 15 and 16 for Speaker
J2 pins 7 and 8	J11 pins 1 and 2 for Microphone

Jumpers J7 and J4 of IC100 moved to left positions

*** NOTE 2:** Either pin 8 or pin 9 will be used, depending on whether the vehicle detector provides a positive or negative output. Use pins 7 and 8 with a DU2.

Full-Duplex System 2500D
with DU2 or External Vehicle Detector,
DM1 Microphone and SP2500LP Speaker
or with no Vehicle Detector and an IC100 or EMG2000

(Front/Inside view of System 2500D base station)

(Rear view of System 2500D base station)

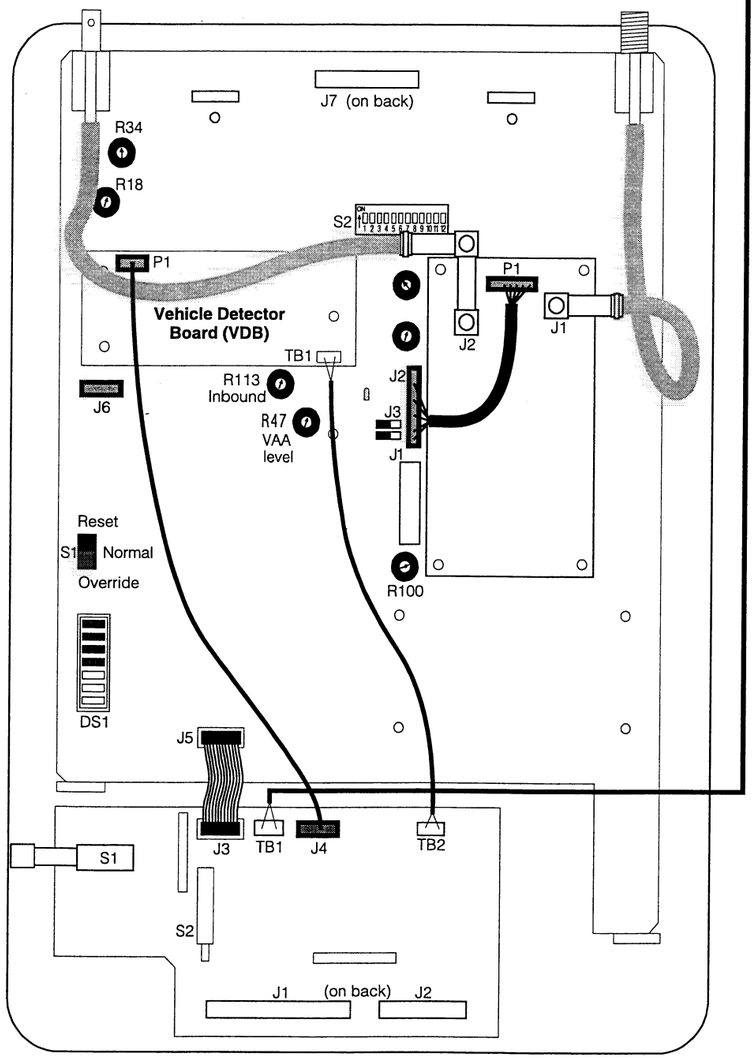

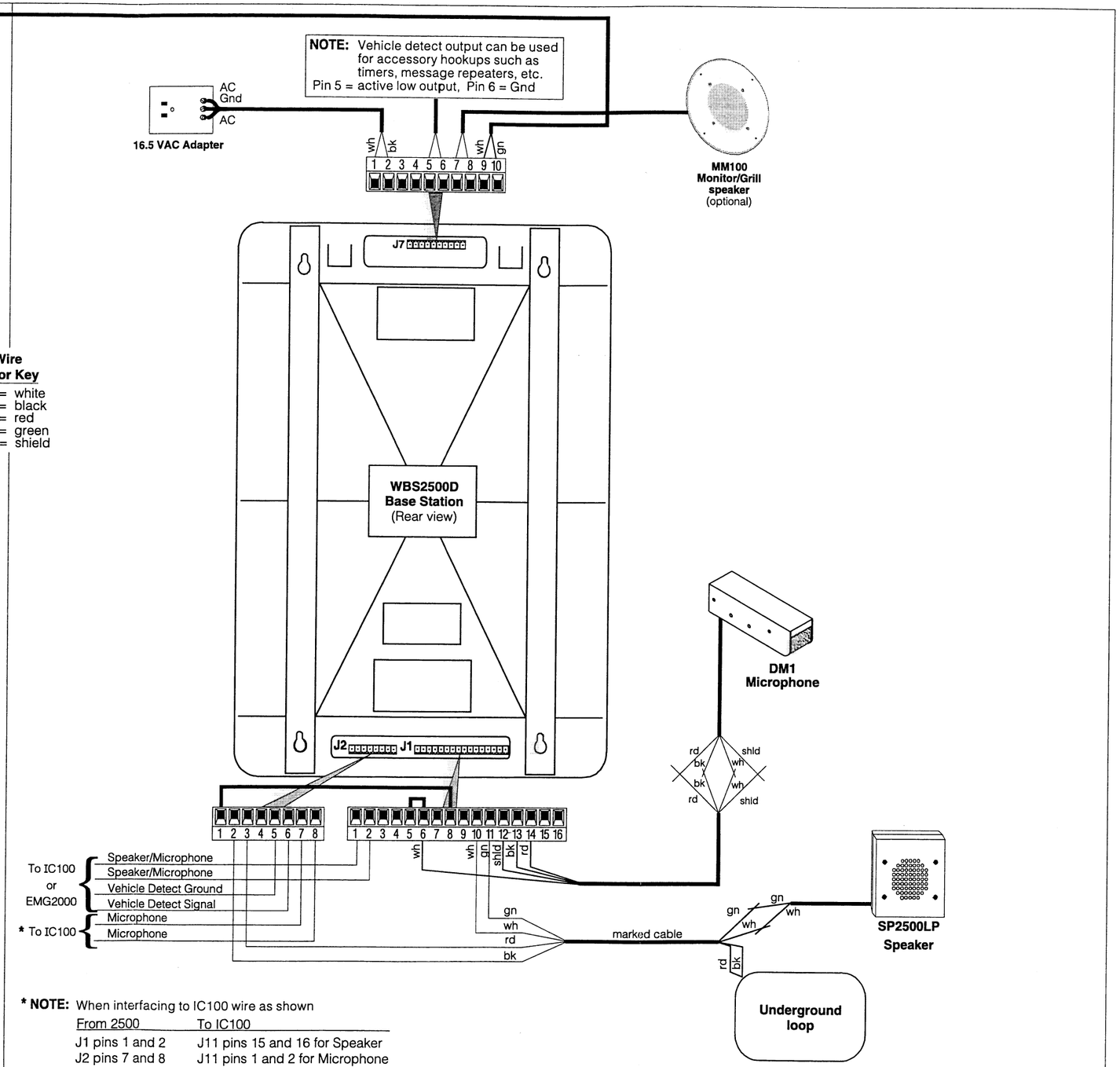

*** NOTE:** When interfacing to IC100 wire as shown

From 2500	To IC100
J1 pins 1 and 2	J11 pins 15 and 16 for Speaker
J2 pins 7 and 8	J11 pins 1 and 2 for Microphone

Jumpers J7 and J4 of IC100 moved to left positions

Full-Duplex System 2500D with Vehicle Detector Board (VDB), DM1 Microphone and SP2500LP Speaker or with no VDB, and an IC100 or EMG2000

NOTE: Vehicle detect output can be used for accessory hookups such as timers, message repeaters, etc.
Pin 5 = active low output, Pin 6 = Gnd

AC
GND
AC

16.5 VAC Adapter

wh bk

1 2 3 4 5 6 7 8 9 10

MM100 Monitor/Grill speaker
(optional)

Connector Labels

J7:

J7	1	2	3	4	5	6	7	8	9	10
	WHITE	BLACK	GROUND	ADECODE	VEH DET SIG	VEH DET GND	RED	BLACK	WHITE	GREEN
	16VAC PWR						GRILL SPKR		OUTSIDE SPEAKER	

J2:

	FACE-TO-FACE OR EARLY WARNING					TO WIRED BACKUP	
	VEH DET SIG	LOOP	LOOP	DU1 (REMOTE)	DU1 GND	DU1 (CASHIER)	SPKR/MIC	SPKR/MIC
J2	1	2	3	4	5	6	7	8

J1:

	TO WIRED BACKUP					FROM EXT VEH DET				FROM MENU BOARD				FACE-TO-FACE	
	LOOP	LOOP	VEH DET SIG	VEH DET GND	JUMPER WITH	EMG 2000	VEH DET GND	NEG VEH DET	POS VEH DET	LOOP WHITE	LOOP GREEN	SPKR /MIC SHIELD	SPKR /MIC BLACK	SWITCH GND	SWITCH RED
J1	1	2	3	4	5	6	7	8	9	10	11	12	13	14	15	16

J7

WBS2500D Base Station
(Rear view)

J2 J1

Wire Color Key

wh = white
bk = black
rd = red
gn = green

1 2 3 4 5 6 7 8

1 2 3 4 5 6 7 8 9 10 11 12 13 14 15 16

To wired system
- Speaker/Microphone
- Speaker/Microphone
- Vehicle Detect Signal
- Vehicle Detect Ground

shield wh gn

gn
wh

SP2000A Speaker

ground

bk rd

bk rd

detect output

to loop

Vehicle detector

Underground loop

Vehicle Detection

Pin 7 = Ground
* **Pin 8** = Negative input:
Vehicle not present — Input open
Impedance to ground ≥100kΩ
Vehicle present — Input closed
Impedance to ground <50Ω, 10.0mA

* **Pin 9** = Positive input:
Vehicle not present — 0.0V ±0.4V, 0mA
Vehicle present — ≥+4V, 0.33mA
≤+48V, 4.7mA

* **NOTE:** Either pin 8 or pin 9 will be used, depending on whether the vehicle detector provides a positive or negative output.

Half-Duplex System 2500D Wiring Diagram

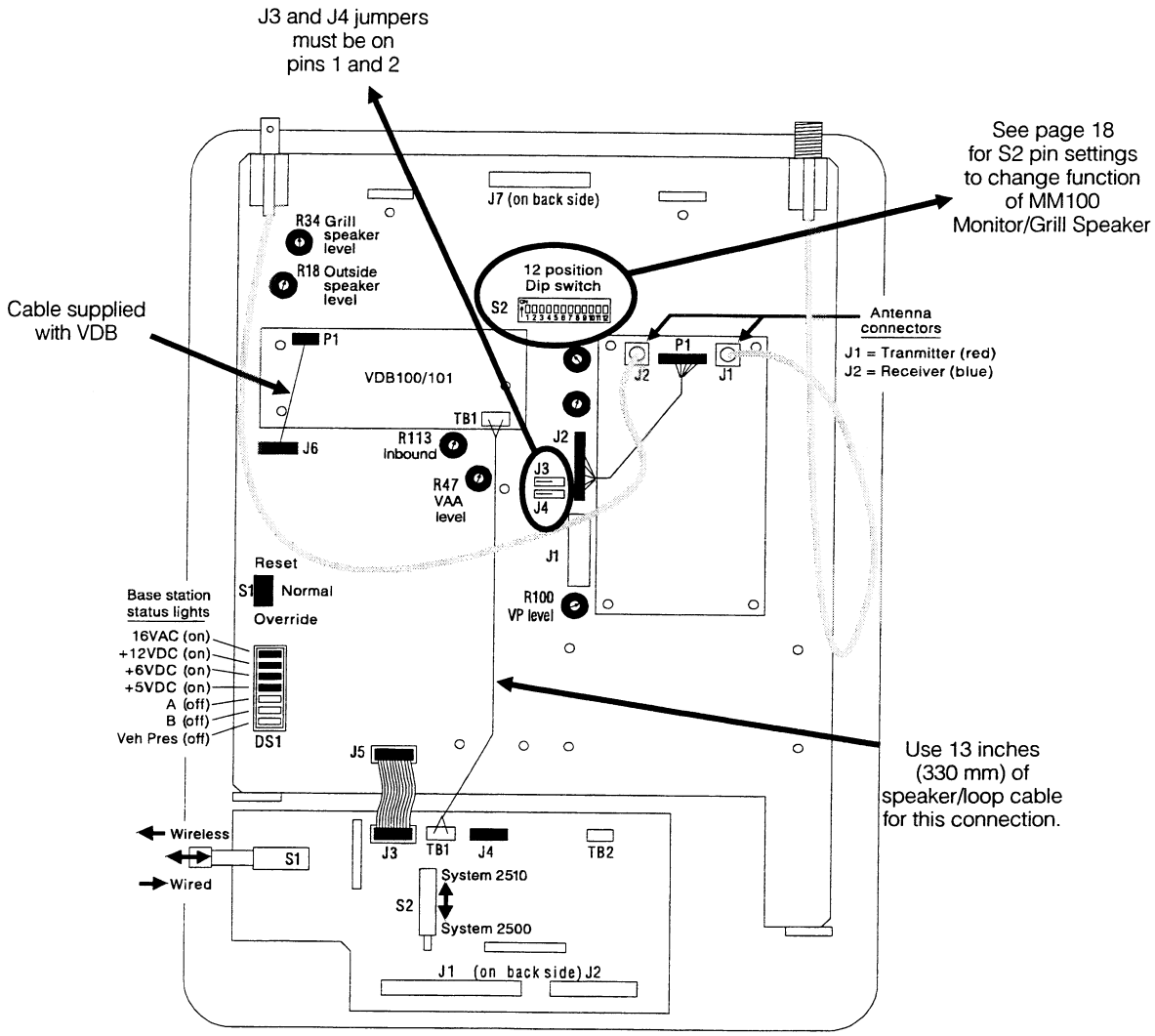

Half-Duplex System 2500 with VDB100/101 Circuit Board Diagram

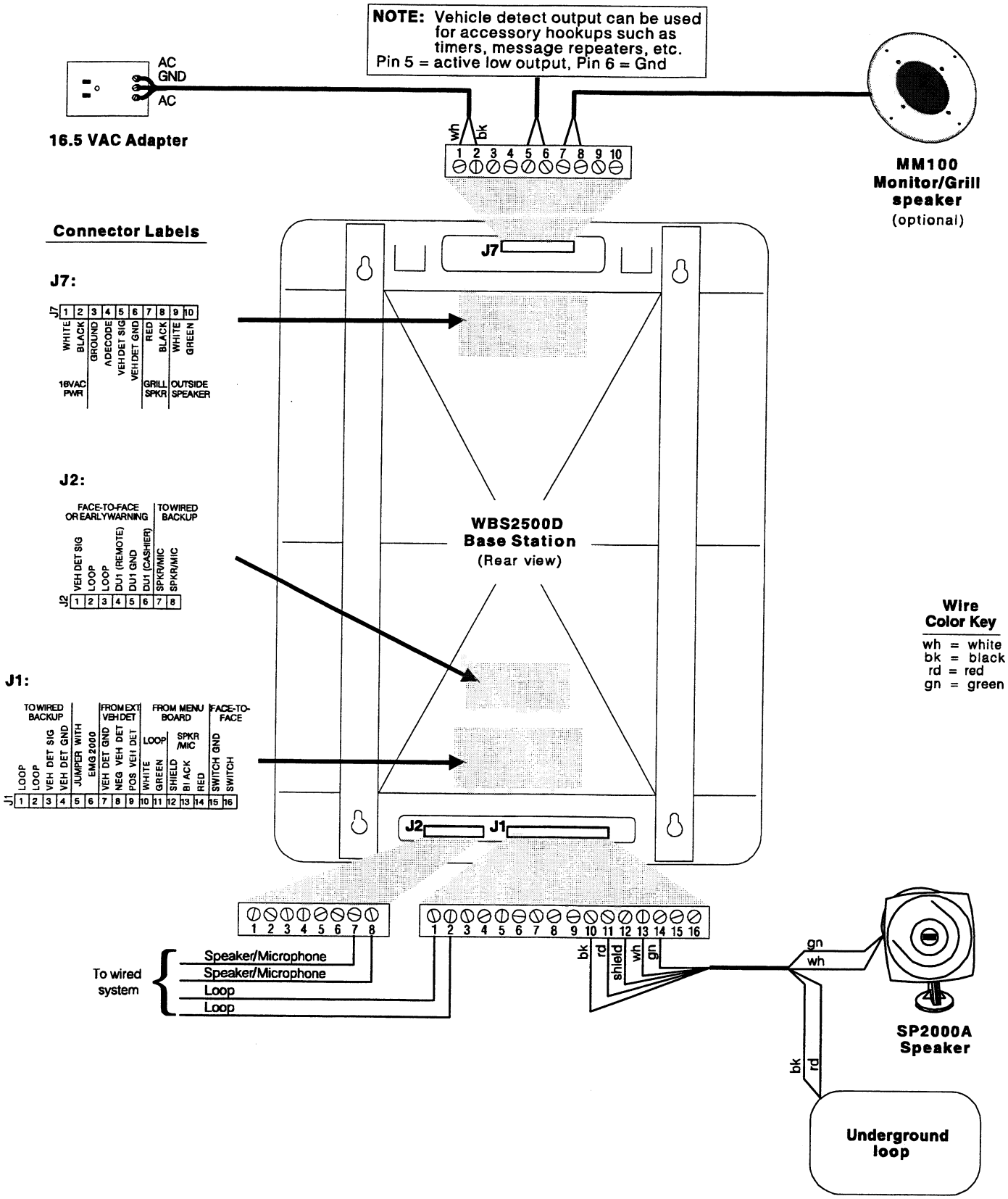

Half-Duplex System 2500D with VDB100/101 Wiring Diagram

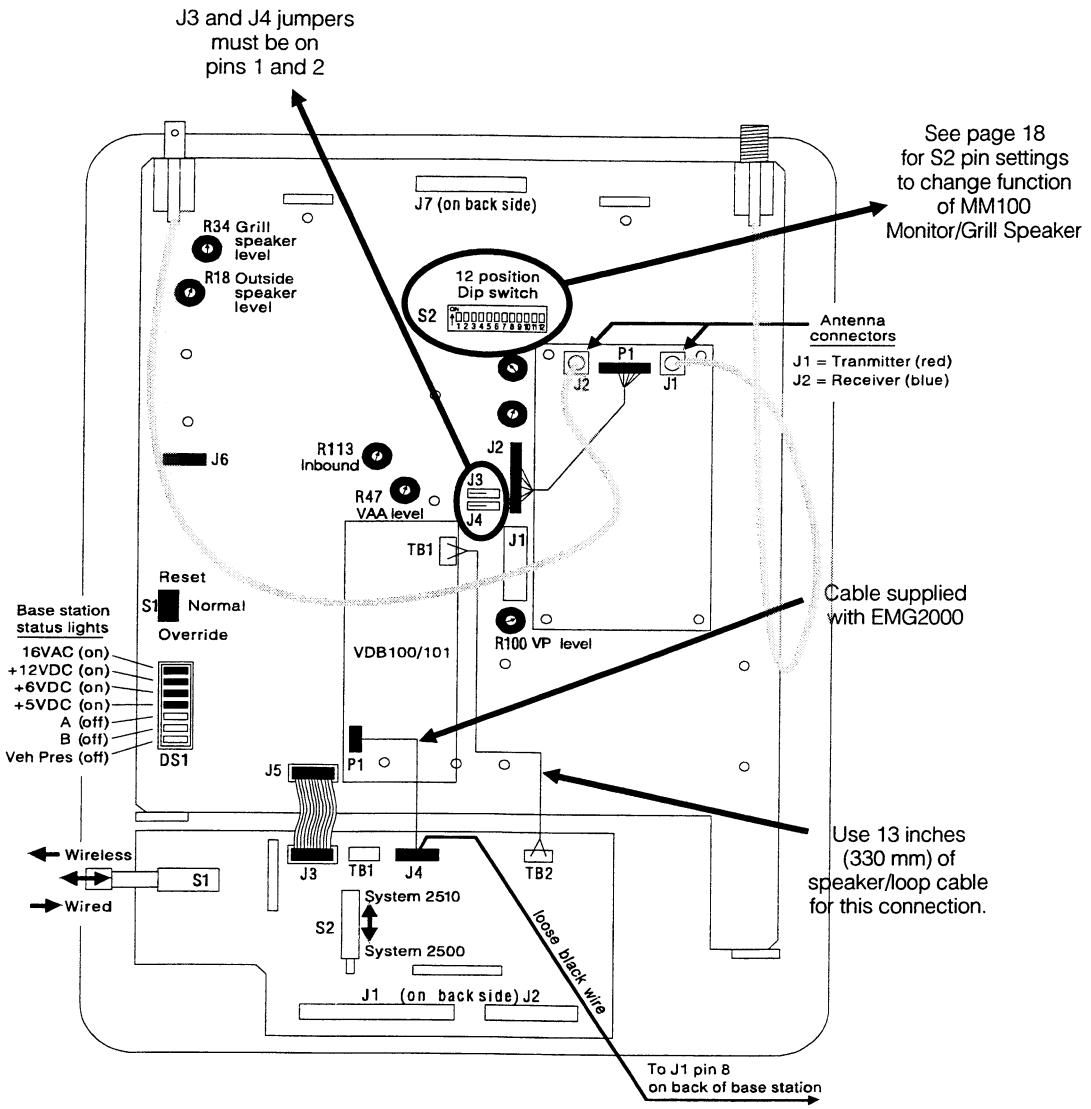

Half-Duplex System 2500D with VDB100/101 and EMG2000 Circuit Board Diagram

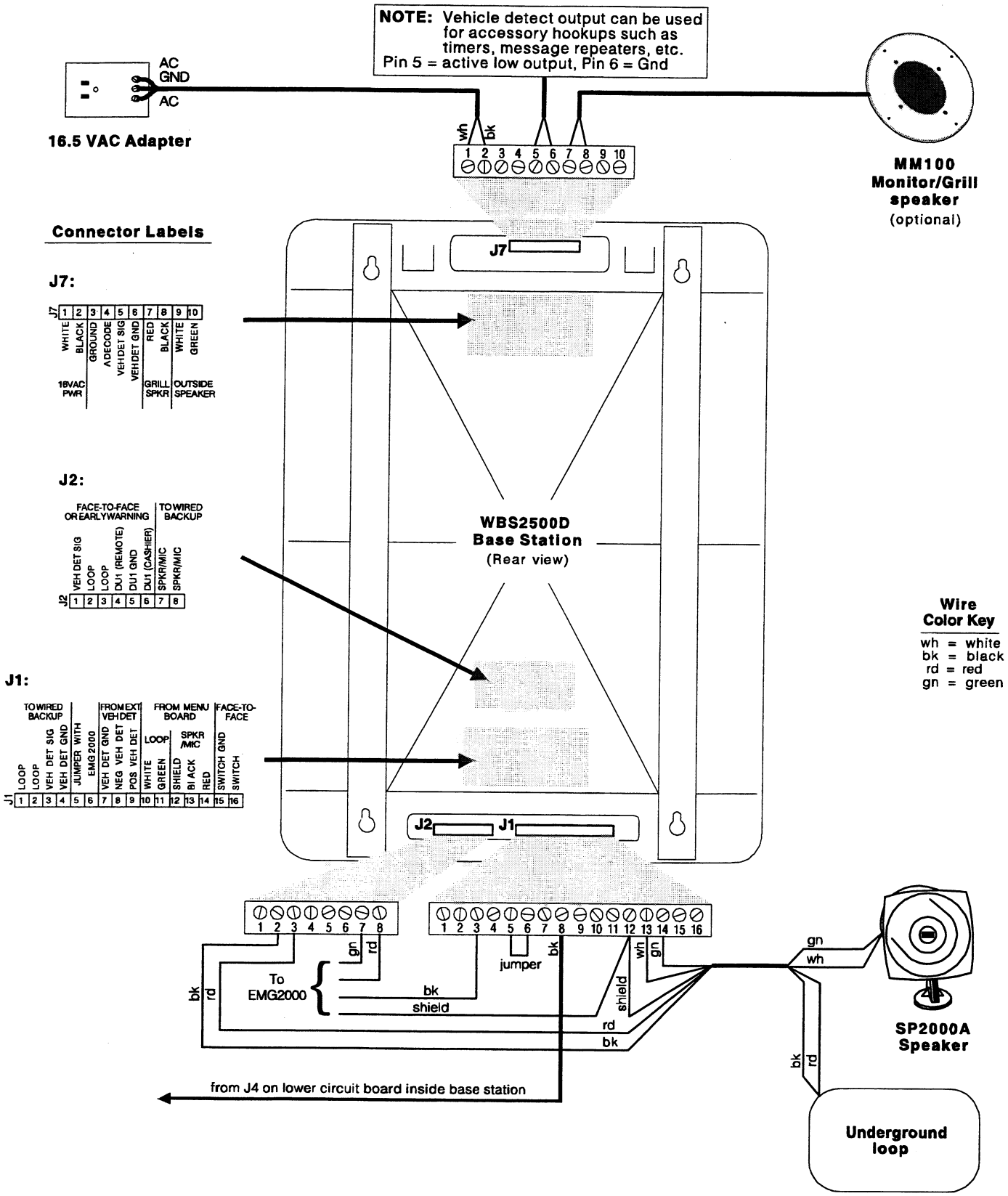

Half-Duplex System 2500D with VDB100/101 and EMG2000 Wiring Diagram

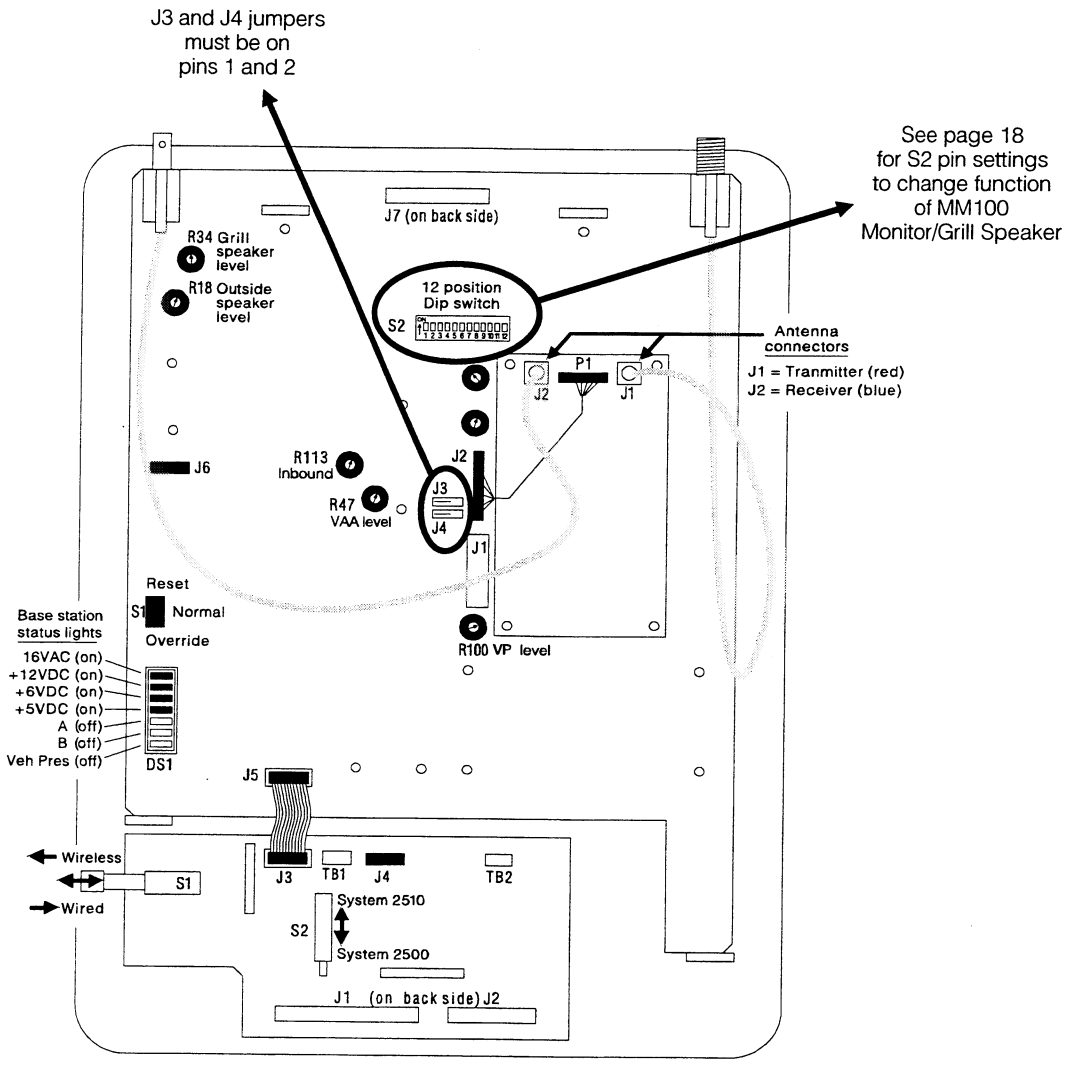

Half-Duplex System 2500D with DU1/DU2 Circuit Board Diagram

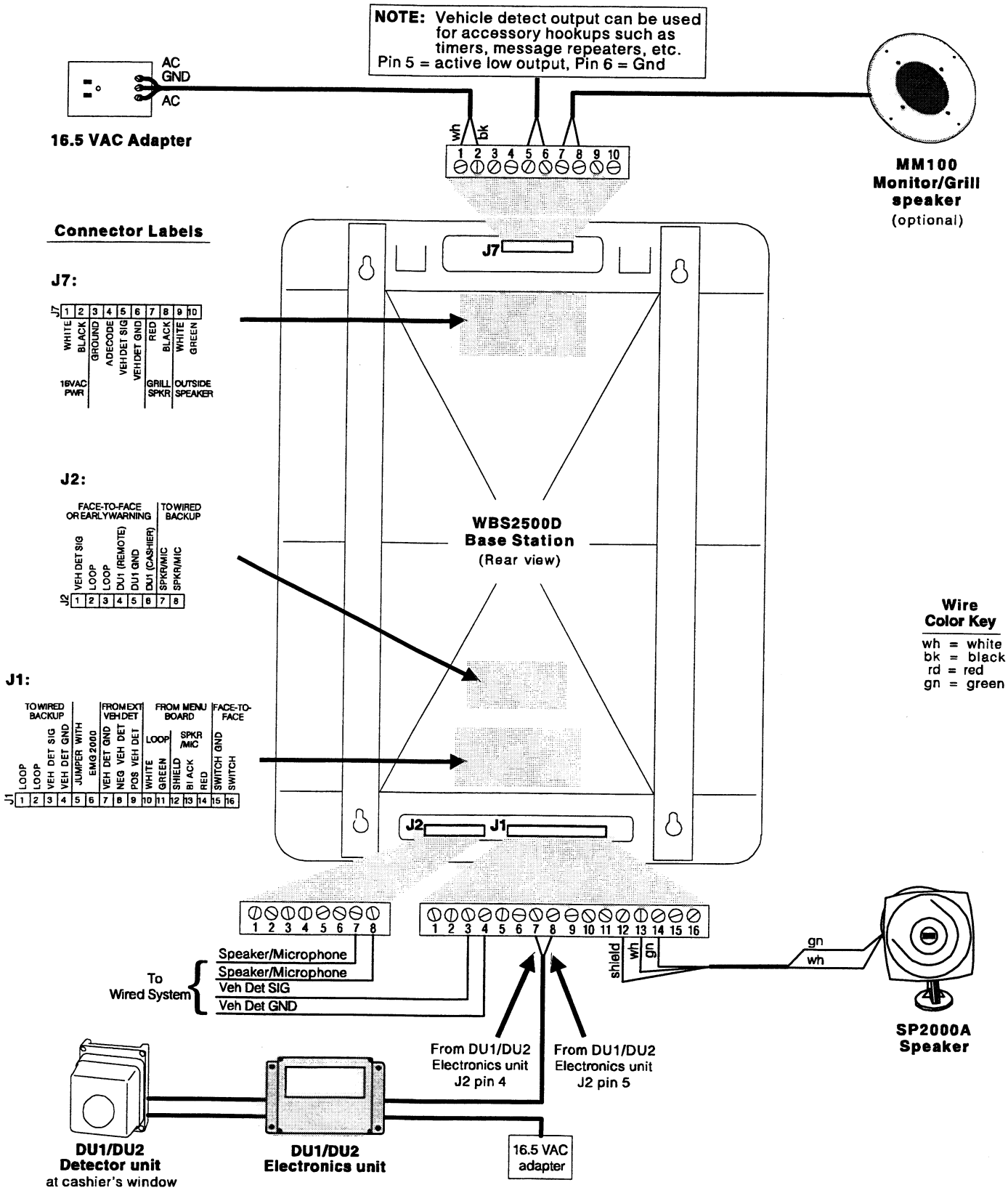

Half-Duplex System 2500D with DU1/DU2 Wiring Diagram

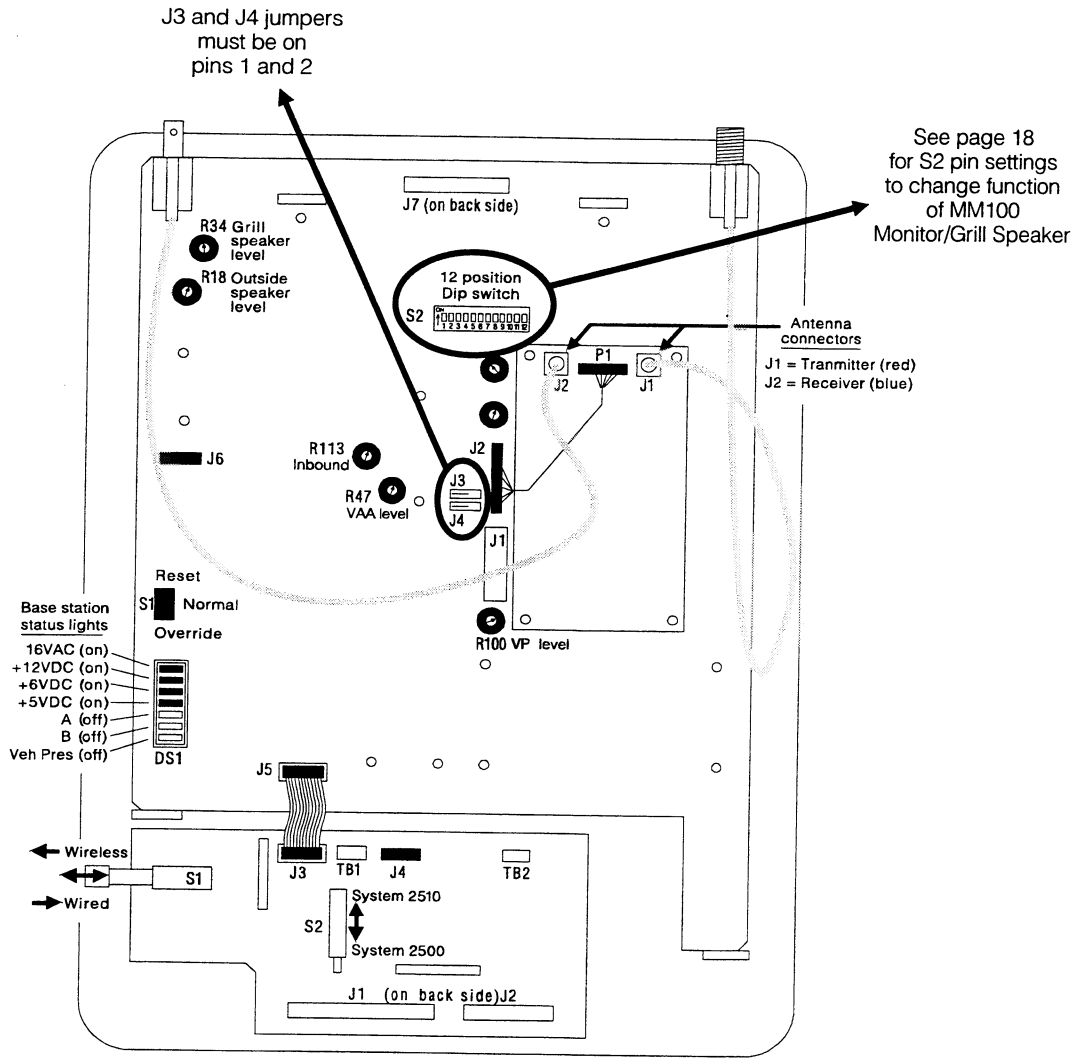

Half-Duplex System 2500D with DU1/DU2 and EMG2000 Circuit Board Diagram

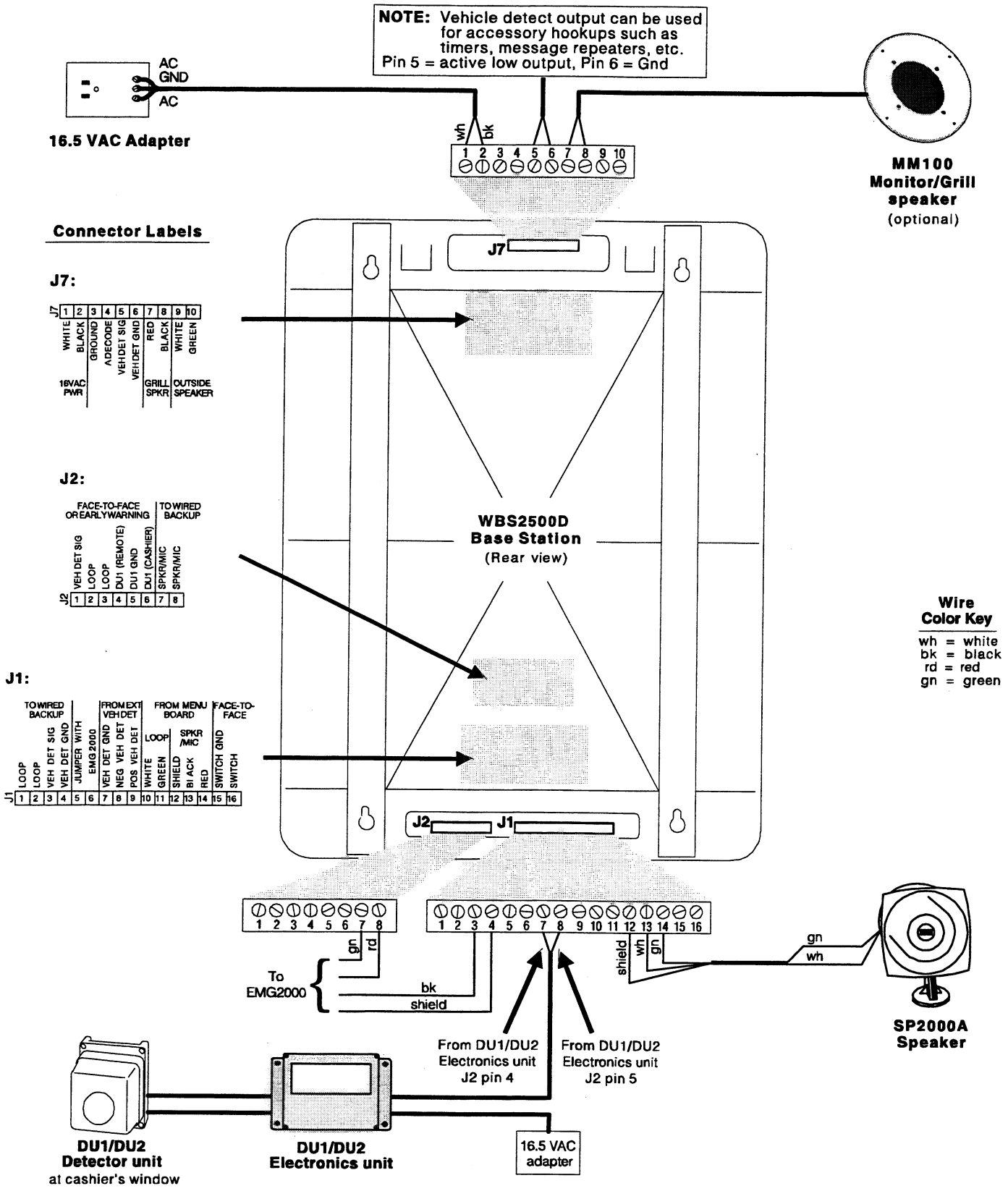

Half-Duplex System 2500D with DU1/DU2 and EMG2000 Wiring Diagram

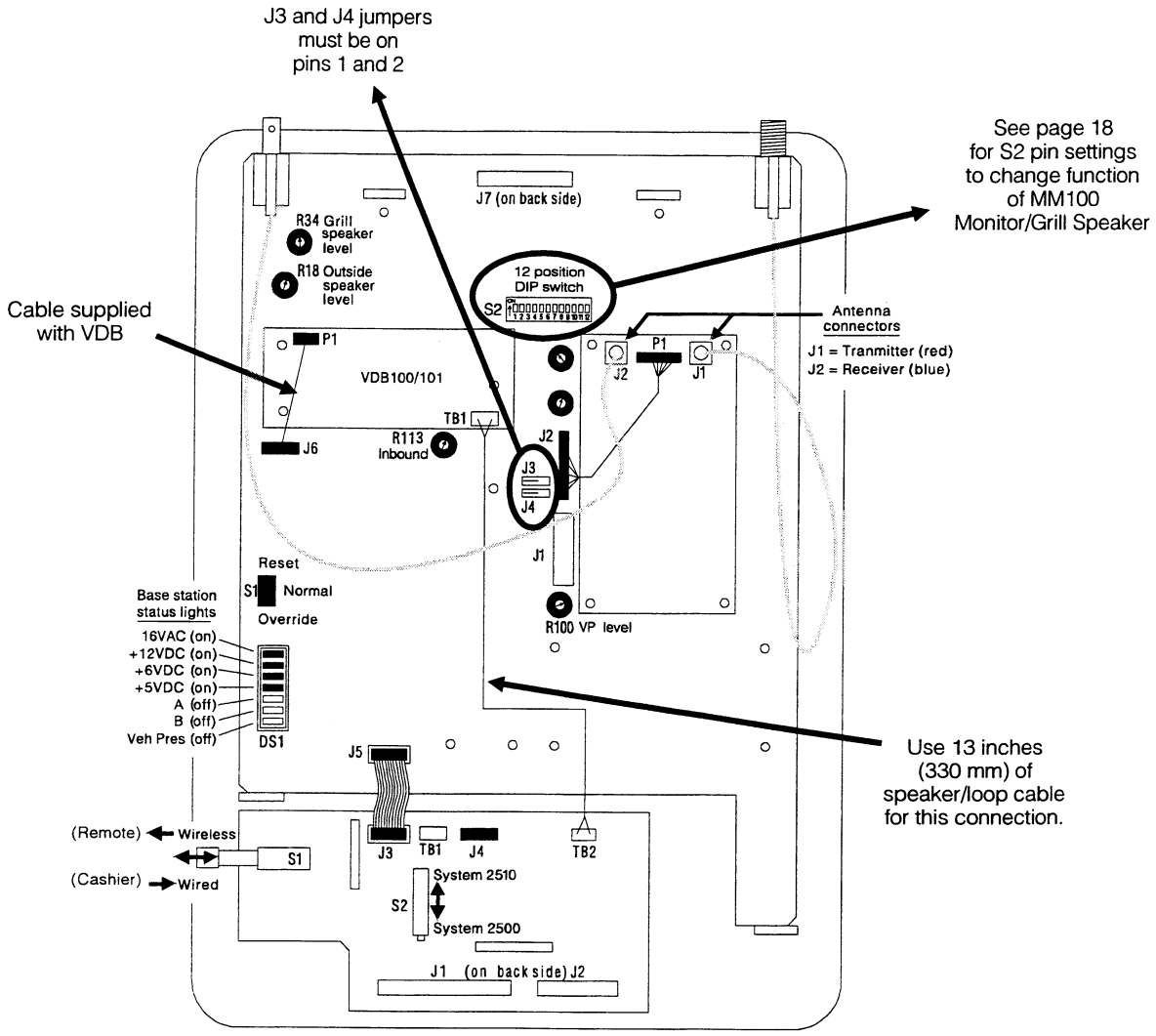

System 2510 with one microphone and one loop Circuit Board Diagram

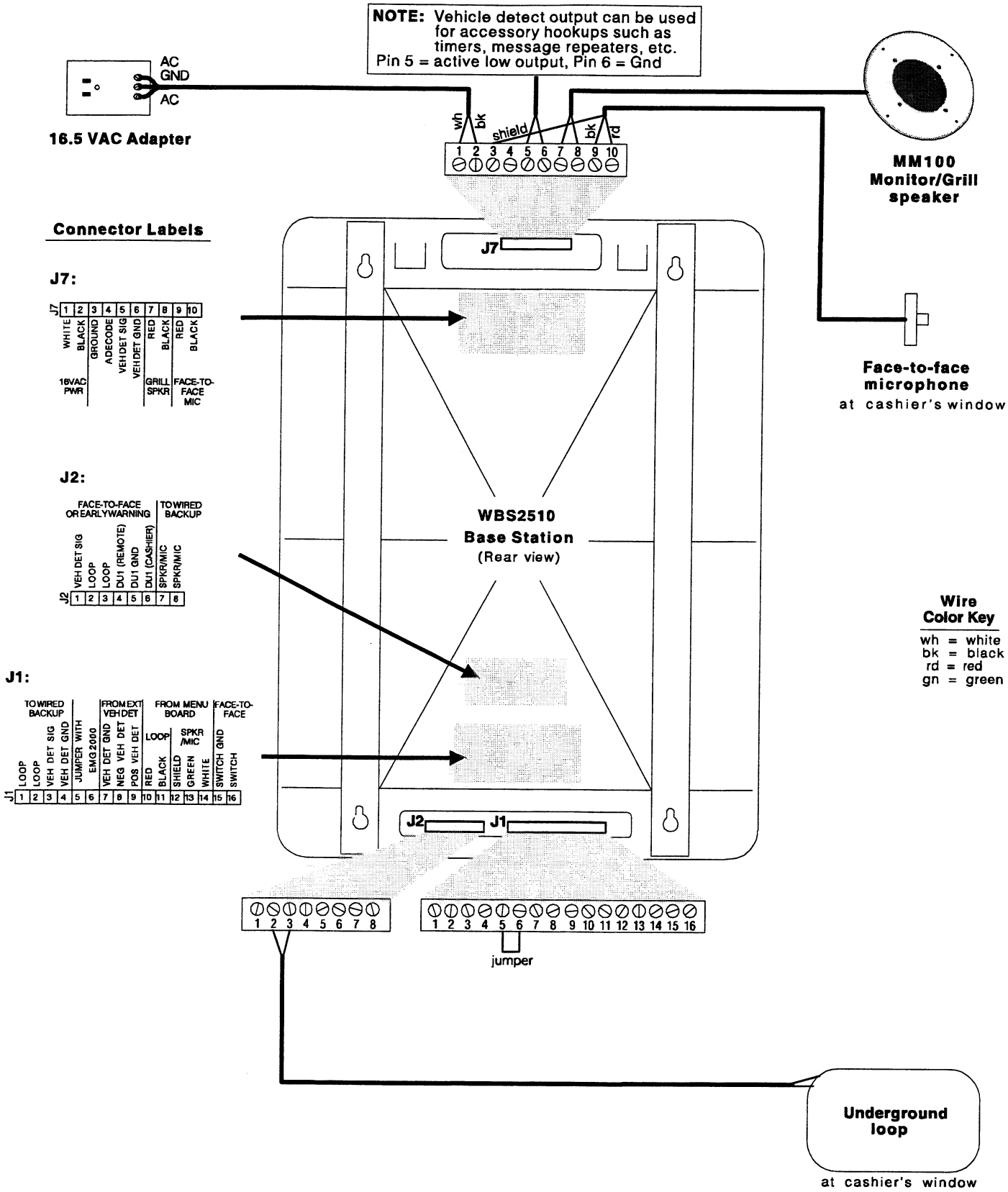

System 2510 with one microphone and one loop Wiring Diagram

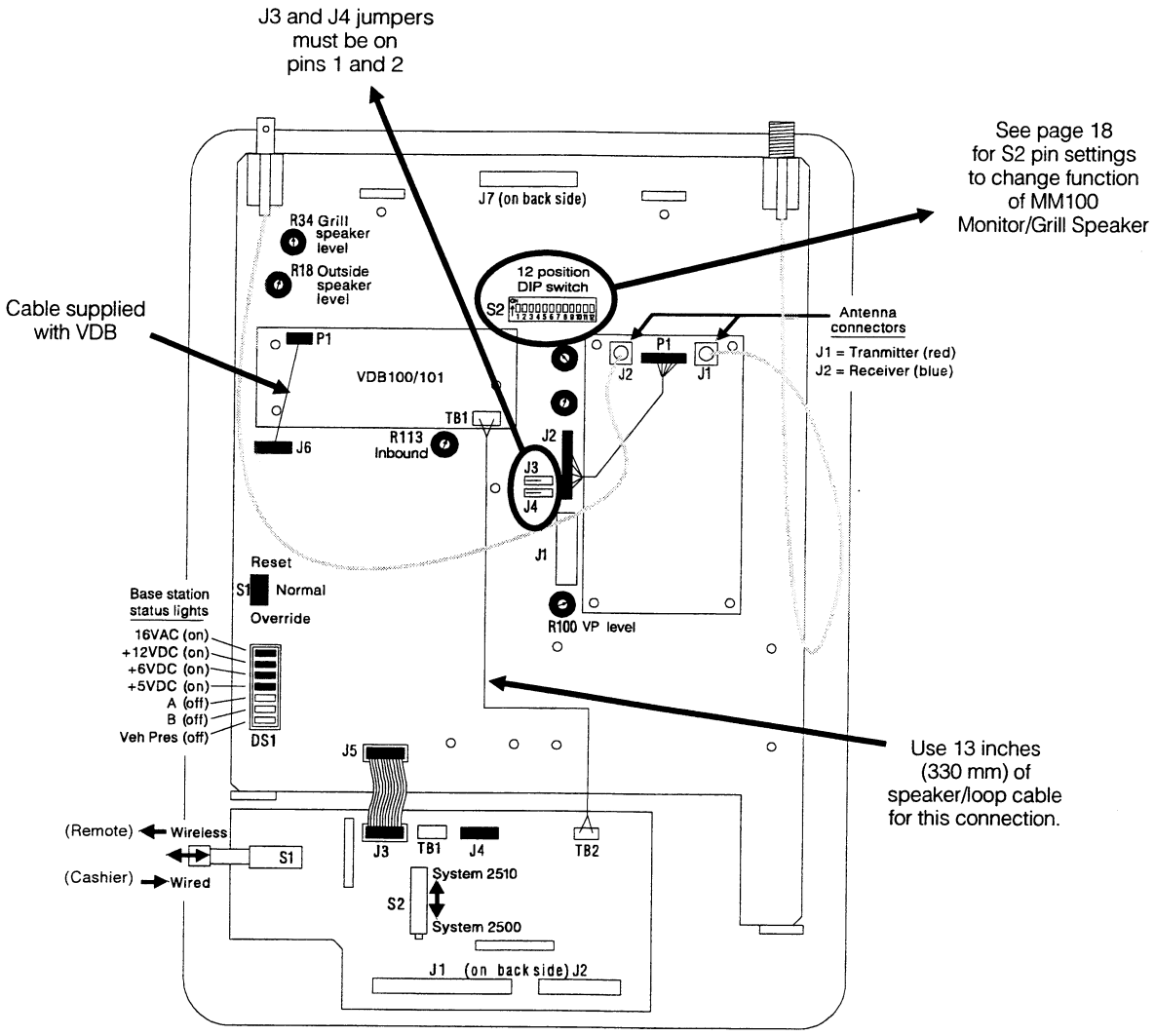

System 2510 with one microphone and two loops Circuit Board Diagram

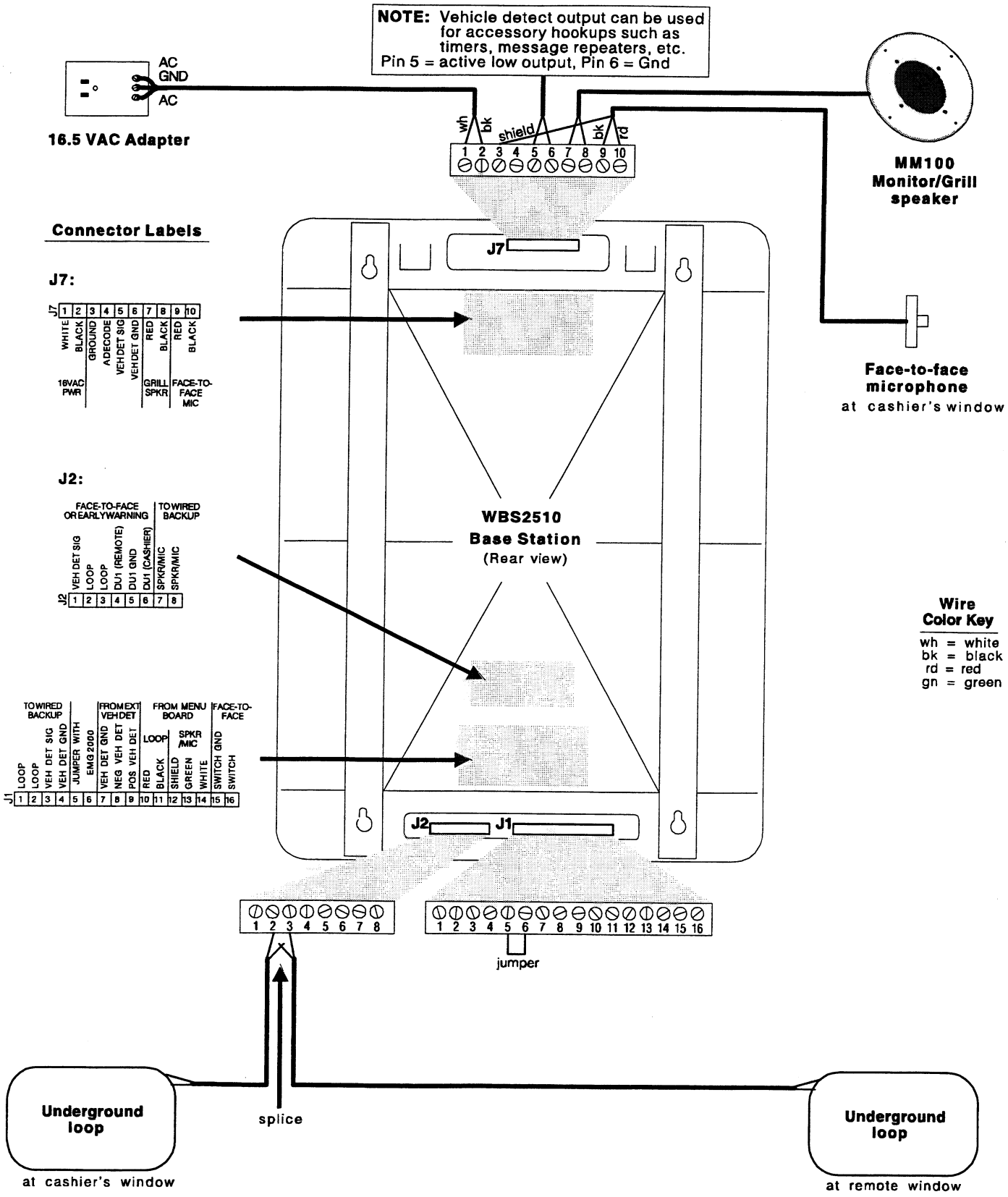

System 2510 with one microphone and two loops Wiring Diagram

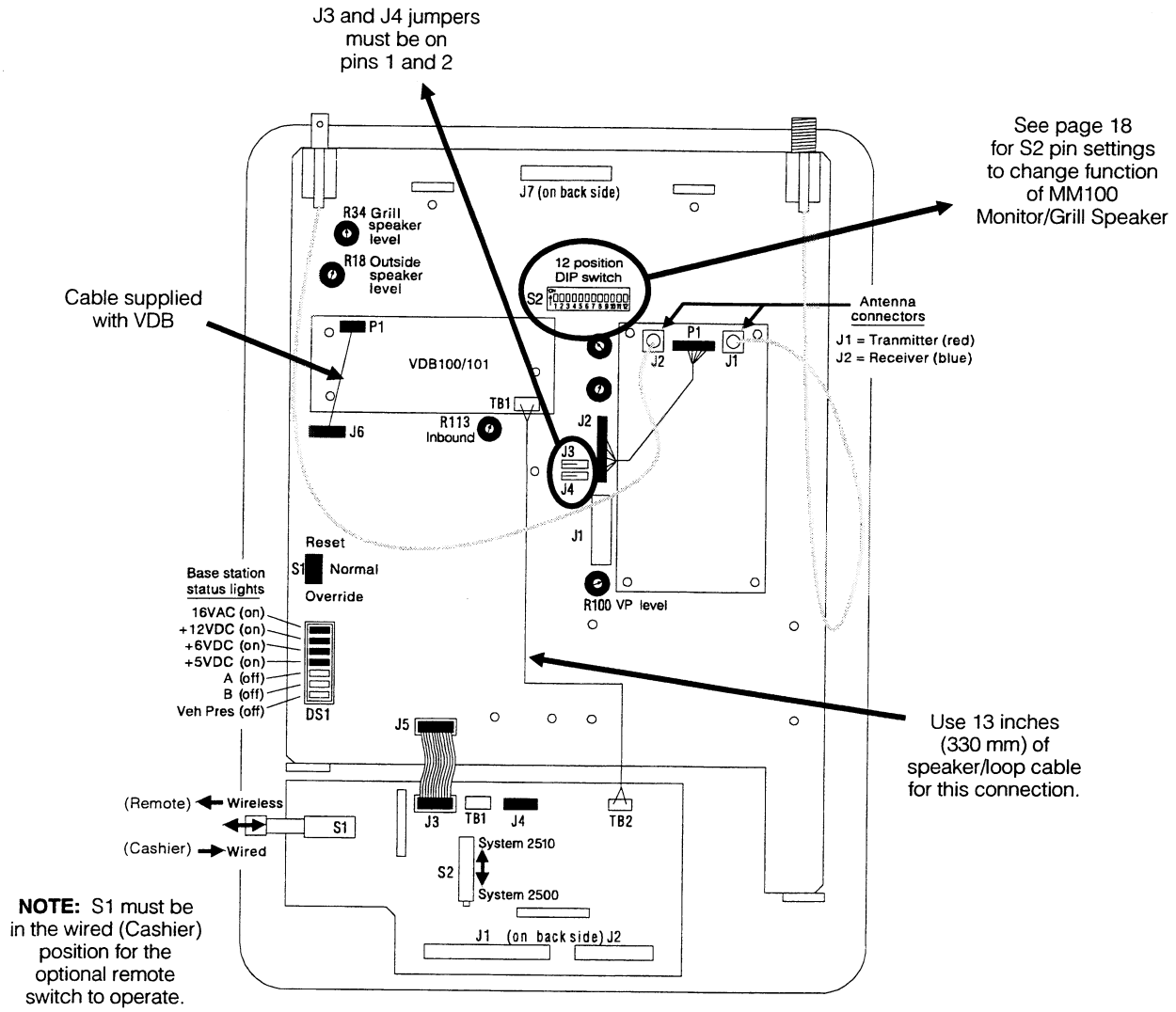

System 2510 with two microphones and two loops Circuit Board Diagram

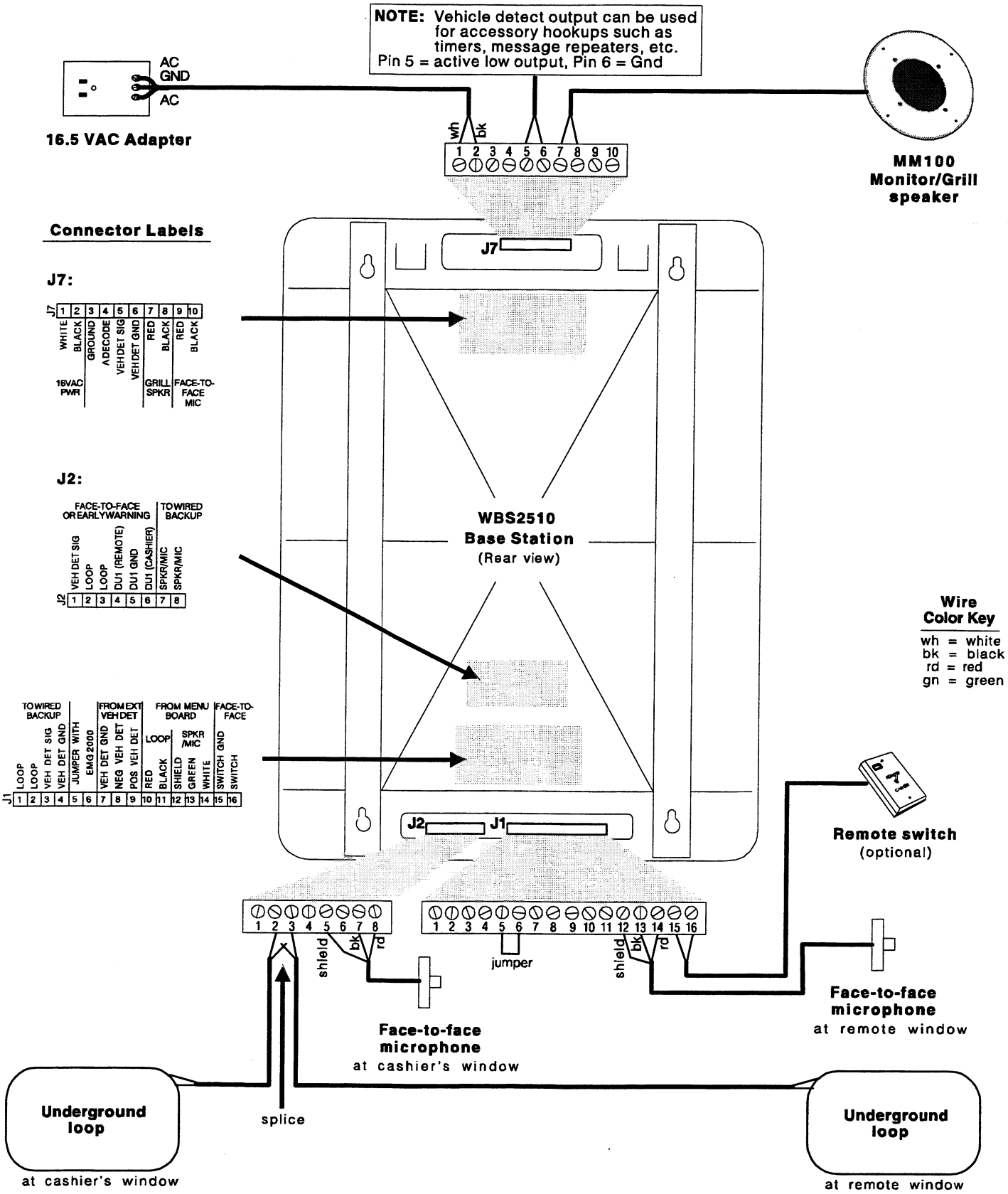

System 2510 with two microphones and two loops Wiring Diagram

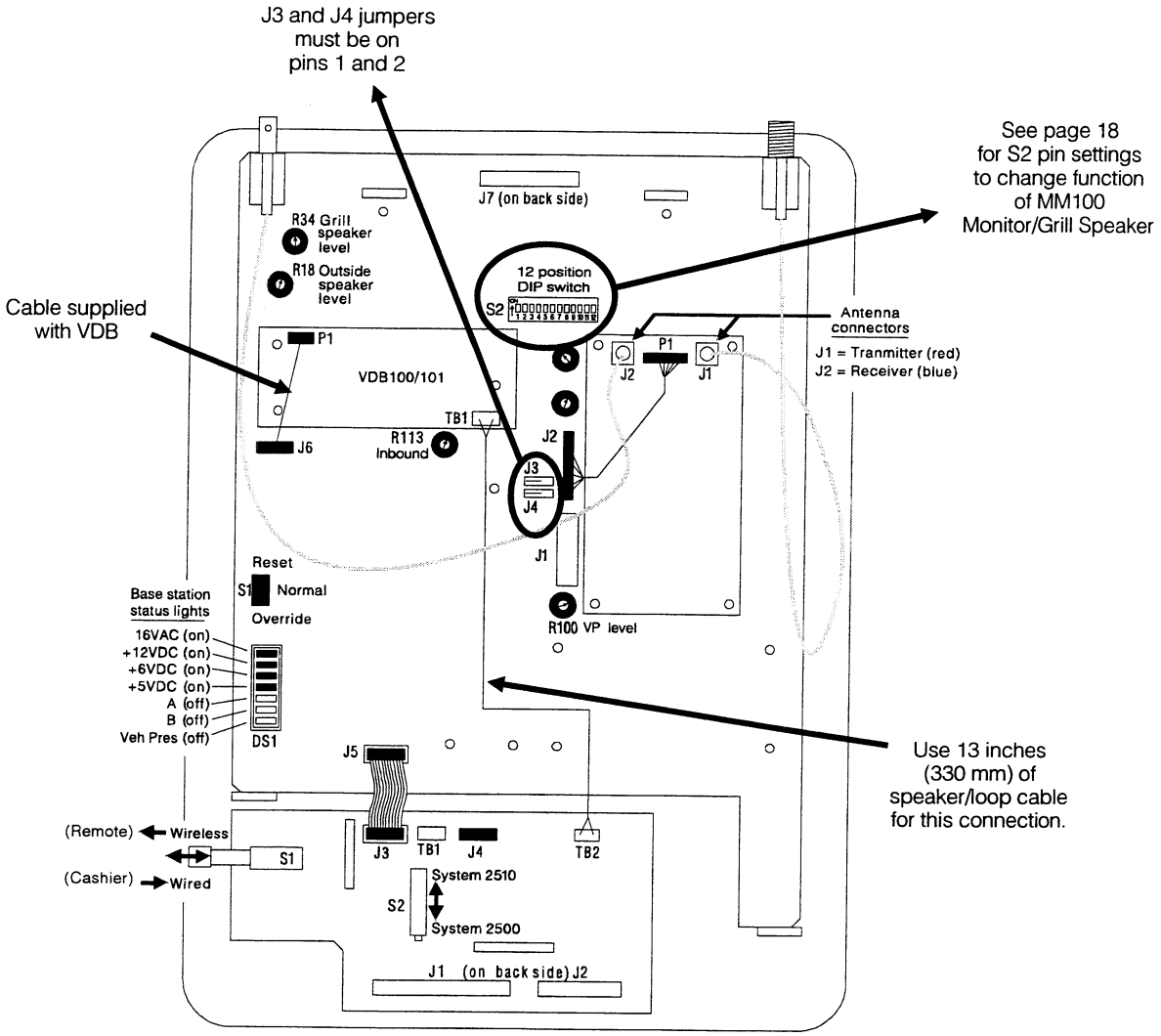

System 2510 with one microphone, one loop and one DU1/DU2 Circuit Board Diagram

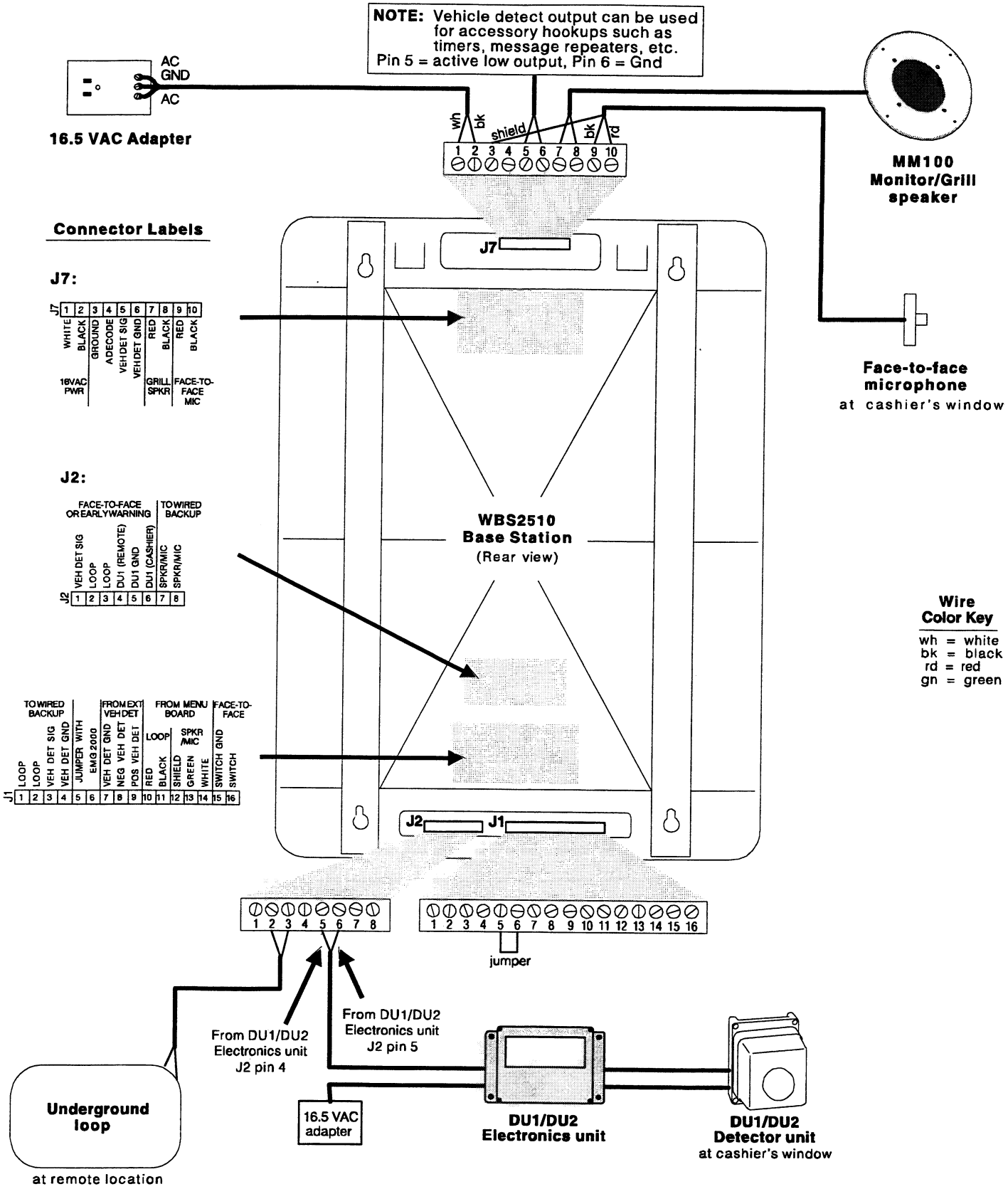

System 2510 with one microphone, one loop and one DU1/DU2 Wiring Diagram

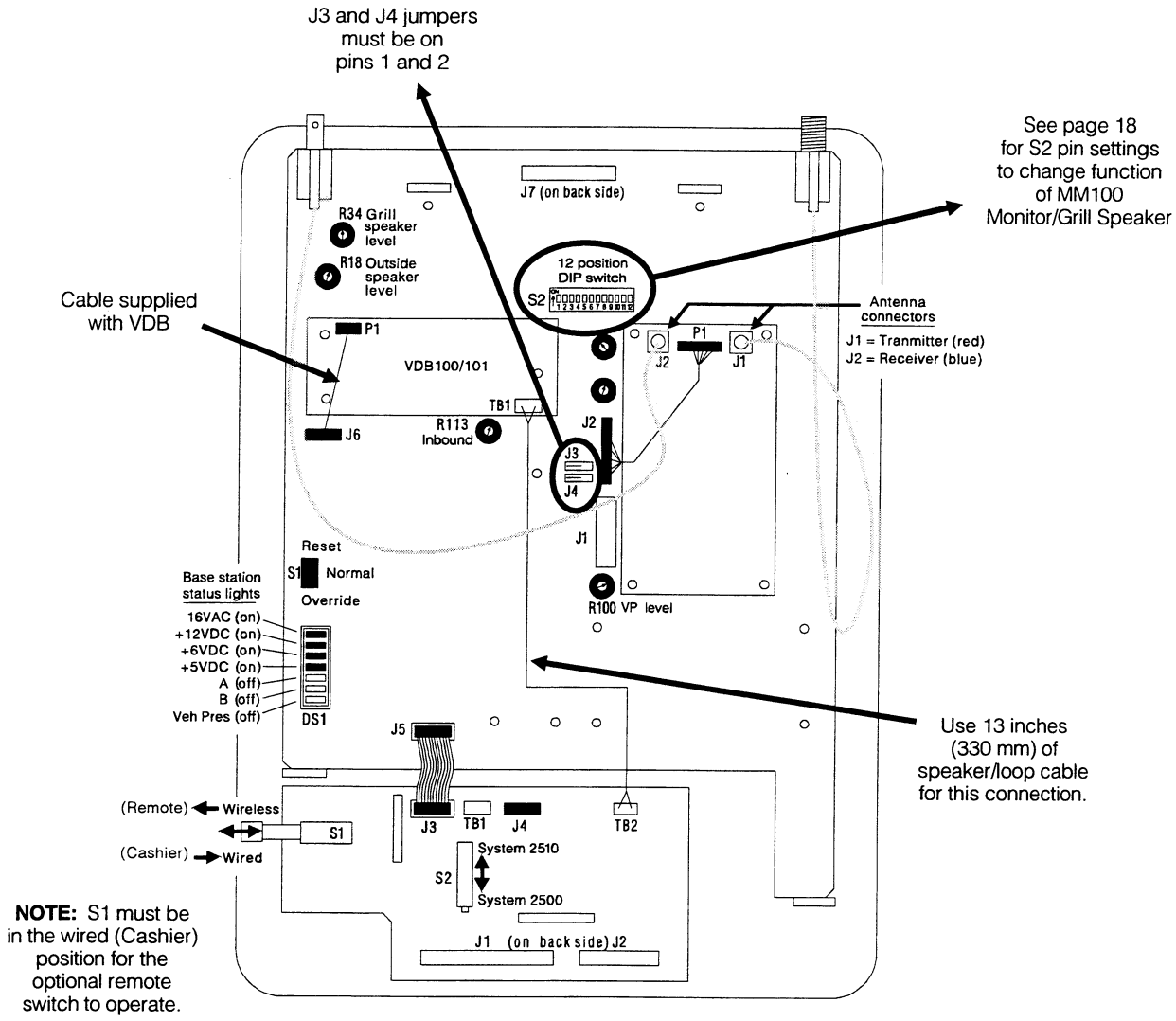

System 2510 with two microphones, one loop and one DU1/DU2 Circuit Board Diagram

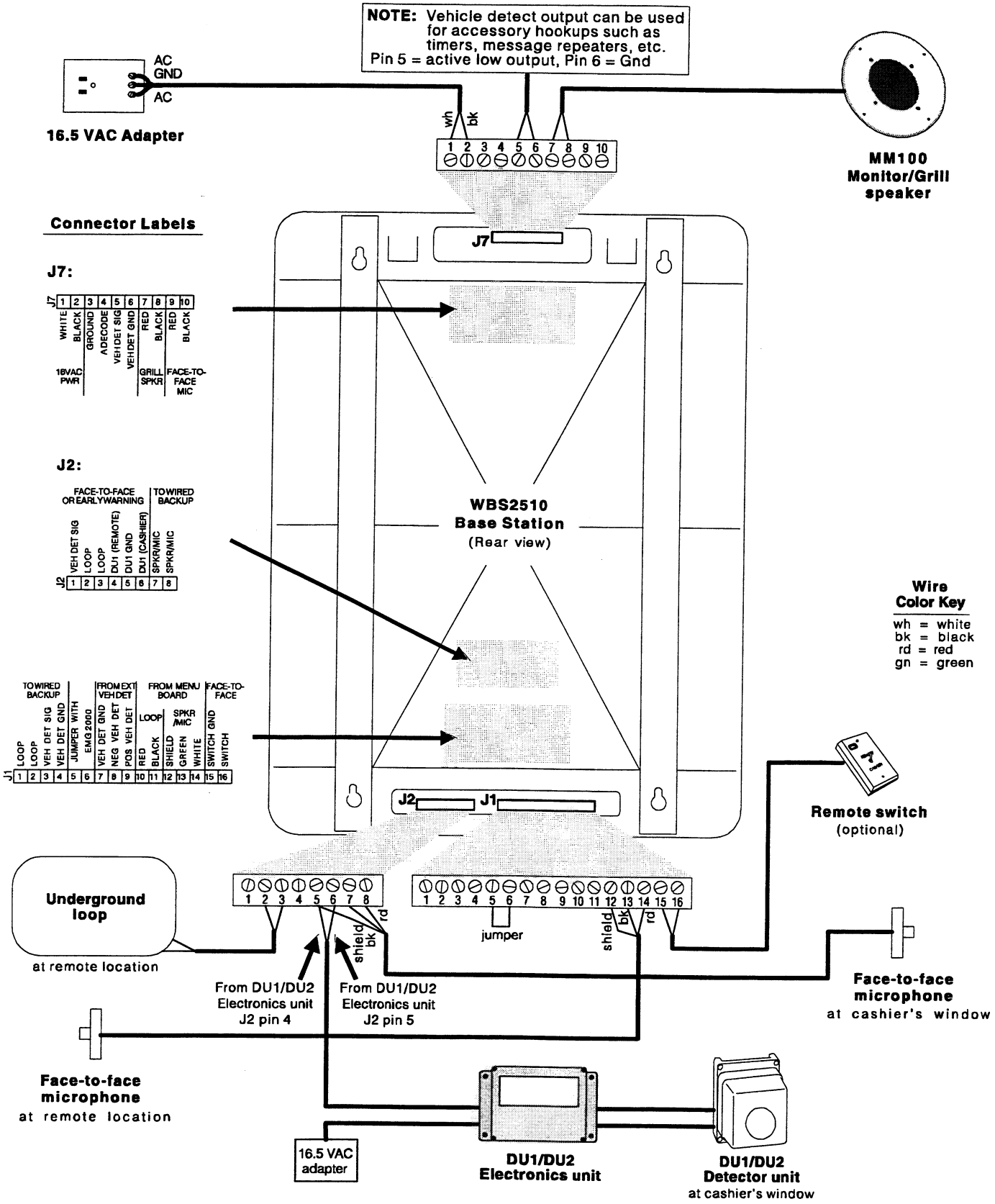

System 2510 with two microphones, one loop and one DU1/DU2 Wiring Diagram

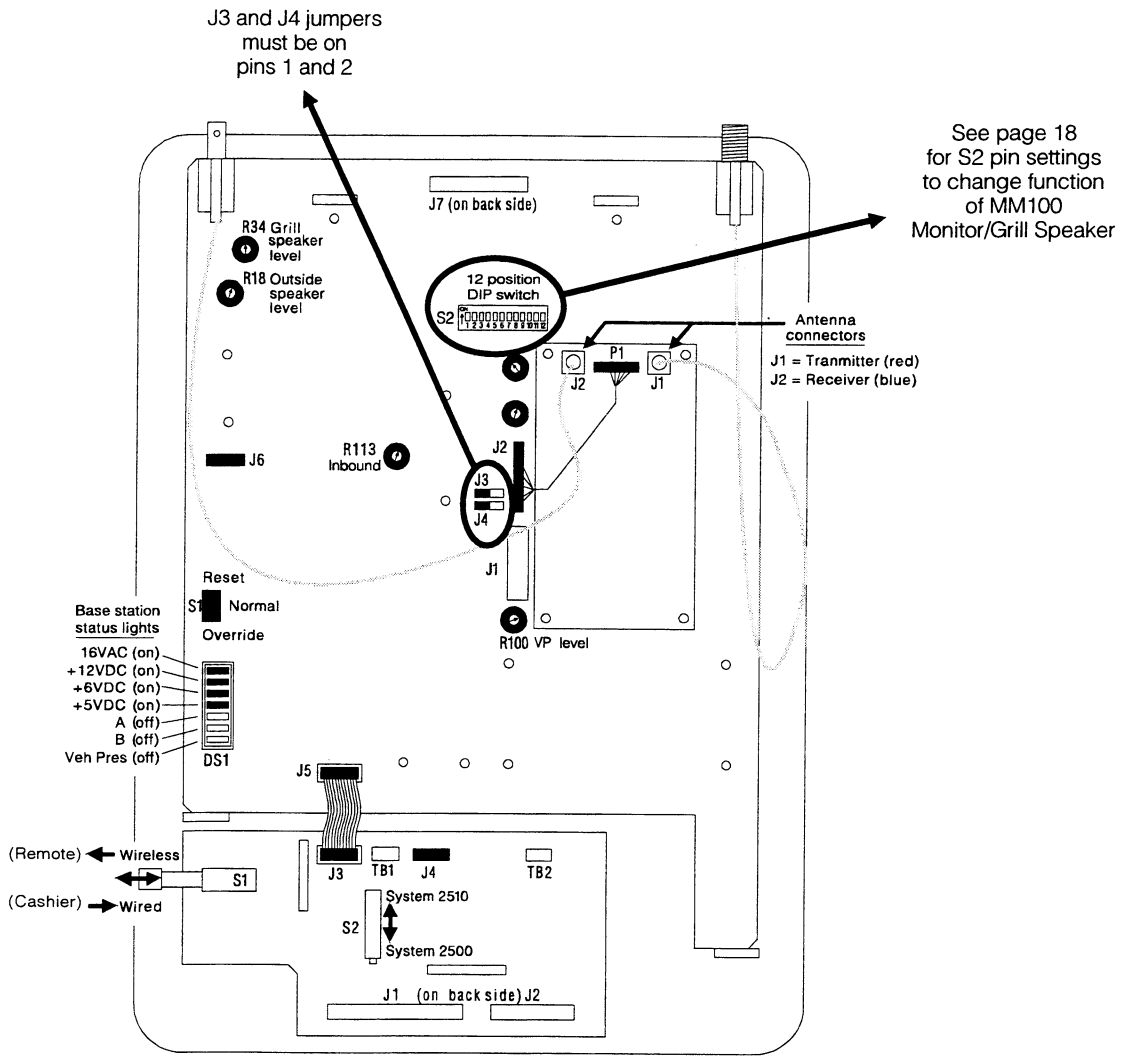

System 2510 with one microphone and two DU1s/DU2s Circuit Board Diagram

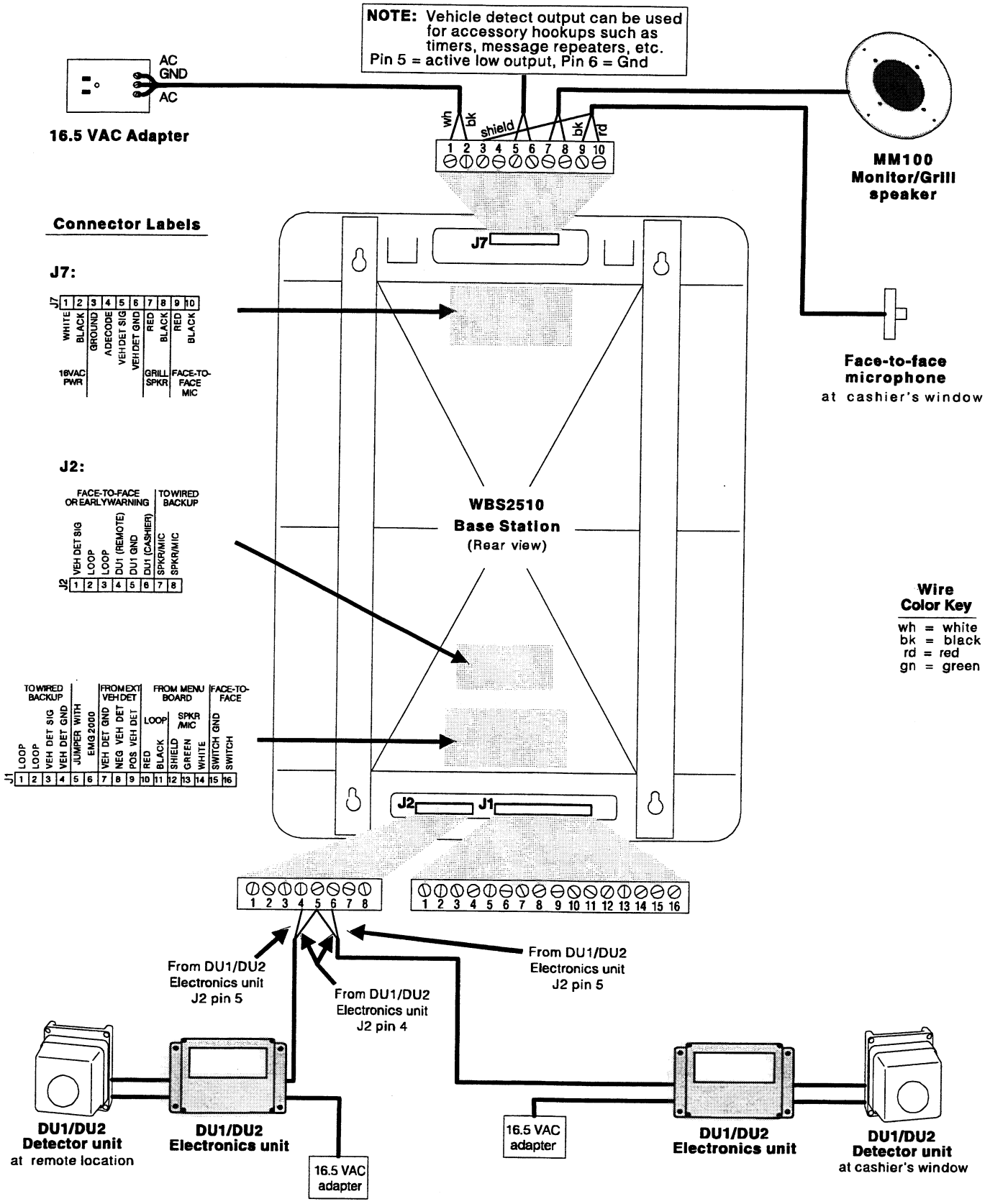

System 2510 with one microphone and two DU1s/DU2s Wiring Diagram

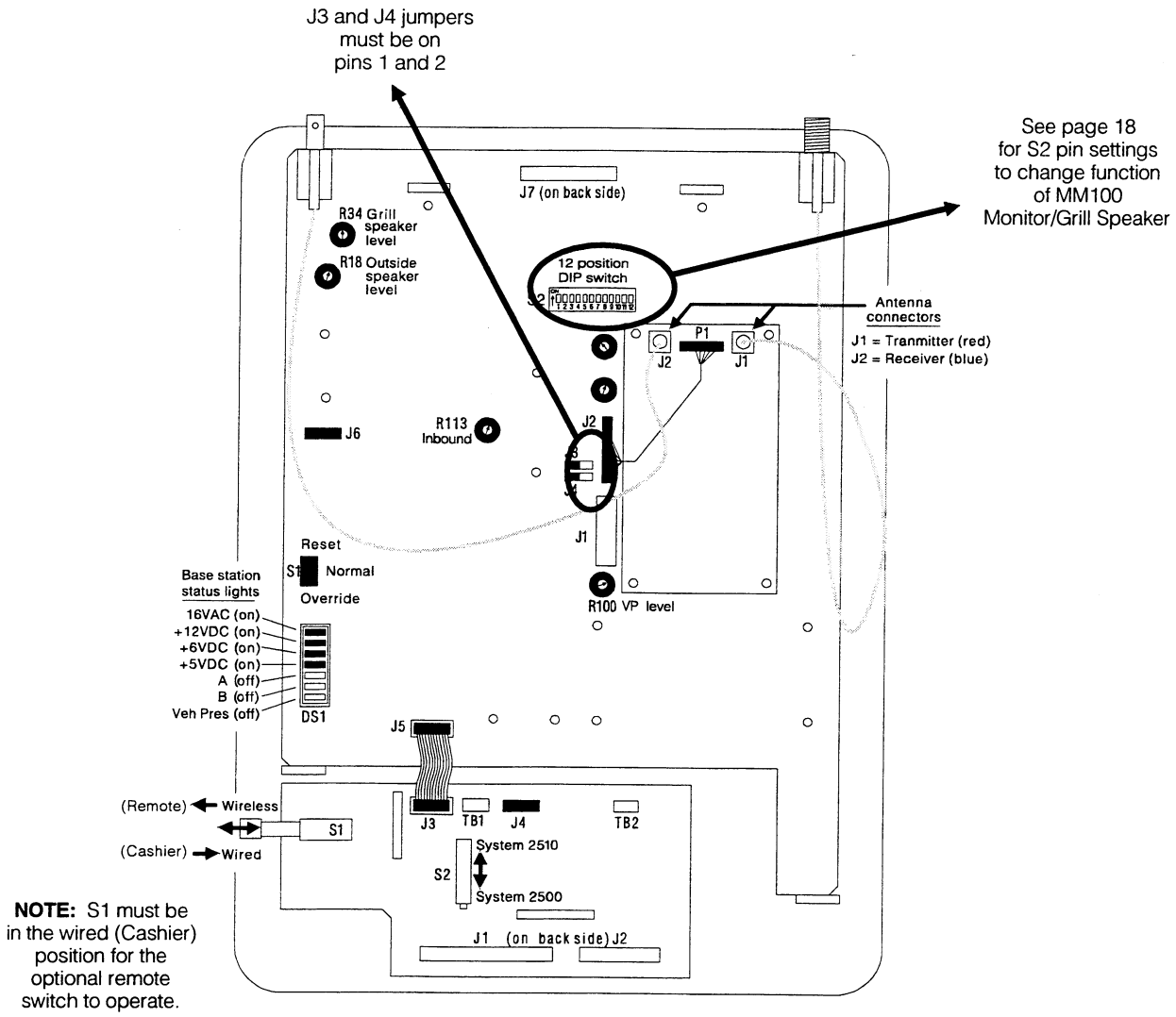

System 2510 with two microphones and two DU1s/DU2s Circuit Board Diagram

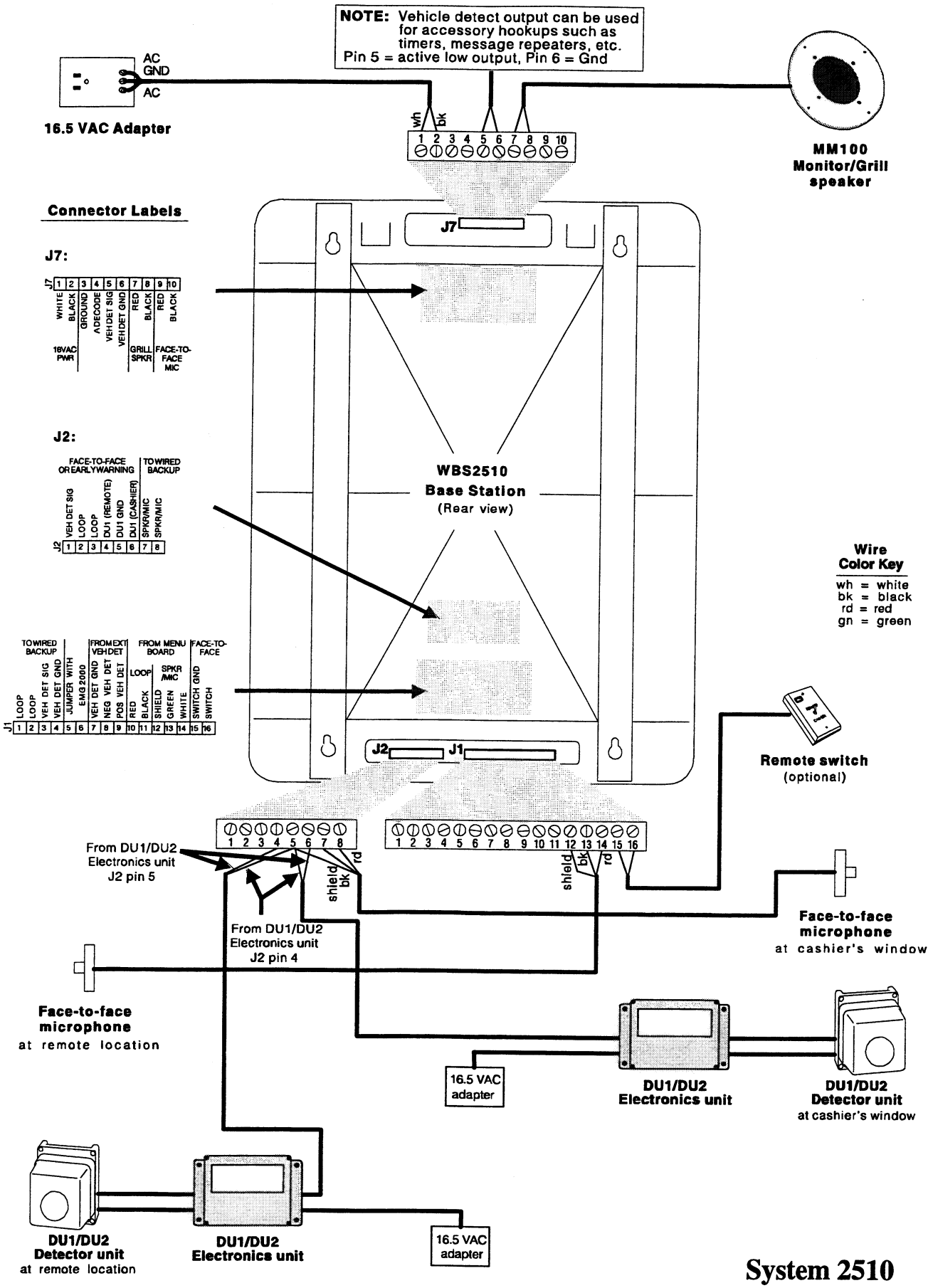

System 2510 with two microphones and two DU1s/DU2s Wiring Diagram

VII. EQUIPMENT CHECKOUT

Refer to the preceeding wiring diagrams as required, to locate items referenced in this section. Plug the AC adapter into the AC electrical outlet and secure it with the grounding screw, if applicable. If using an underground loop and the HME vehicle detector board, reset the loop by pressing the reset switch on front of the base station, with **no vehicle present** in the drive-thru lane.

A. Base Station Connections and Status Lights

- ❑ Be certain all cables are in place, and connectors are fully inserted.
- ❑ Be certain the vehicle detector override switch is in the NORMAL position.
- ❑ Be certain all status lights on the base station are working according to the conditions listed on the wiring diagram.
- ❑ If any of the status lights is not in its correct condition, and cannot be restored to its correct condition by pressing the vehicle detector reset switch when no vehicle is present in the drive-thru lane, call the HME Customer Support Department at 1-800-848-4468.

B. COM2000 COMMUNICATOR®

Repeat the following steps to check out each COM2000 COMMUNICATOR®.

- ❑ Remove the Communicator from its pouch. Do not lose the spare battery cover packed in the bottom of the pouch.
- ❑ Remove the battery cover from the bottom panel of the Communicator and insert a fully-charged battery.
- ❑ Replace the Communicator battery cover.
- ❑ Replace the Communicator in the belt-pac pouch and slide the pouch onto the belt.
- ❑ Plug the headset connector into the Communicator.
- ❑ Route the headset cable through the snap on the pouch.
- ❑ Fasten the Communicator around your waist, put the headset on and adjust the microphone about 2 inches (51mm) from your lips.
- ❑ Turn the Communicator on by rotating the Off/Volume control clockwise.

- ❑ Be certain the ON/POWER indicator light on the COMMUNICATOR® is on. If it is not on, replace the battery.
- ❑ Press button B and speak into the microphone. You will hear your own voice. (The base station must be on for this test to work). Adjust the Off/Volume control for a comfortable listening level.

C. Channels A & B Status Lights

- ❑ Press button A on the Communicator. Be certain the "A" light in the base station goes on.
- ❑ Press button B on the Communicator. Be certain the "B" light in the base station goes on.

D. Vehicle Detector System

- ❑ Be certain no vehicles or other objects are in the drive-thru lane.

  NOTE: If using an HME vehicle detector board, and the power is interrupted while there is a vehicle at the speaker post, the system will give false indication that no vehicle is present when the power is restored. To correct this, press the vehicle detector reset switch on the front of the base station, with no vehicle present. If using some other detector, reset it in accordance with its operating instructions.

- ❑ Be certain the vehicle detector override switch works by pushing the override switch on the base station to OVERRIDE. A tone should be heard in all Communicators. Following the tone, the audio channel from the speaker post should be continuously open. Return the override switch to NORMAL.
- ❑ Drive a car up to the outside speaker. A tone should be heard in all Communicators. Following the tone, the audio channel from the speaker post should be continuously open. When the car is driven away, the system should become silent.

E. Channel "A" Communication

NOTE: Only one COMMUNICATOR® can be used at a time to transmit, or interference will occur.

1. System 2500D

- ❑ After the vehicle-present tone is heard, press the "A" button on the Communicator and speak into the microphone. Be certain the transmission is clearly heard by the person in the vehicle by listening to their response while pressing and holding the "A" button. Repeat this check with each Communicator.
- ❑ Have the vehicle driven away from the speaker post. The system should become silent.

2. System 2510

- ❑ After the vehicle present tone is heard, press the "A" button on the Communicator and speak into the microphone. Be certain the transmission is clearly heard by all personnel wearing Communicators. Release the "A" button and ask the person in the vehicle to speak, to be certain his/her voice is clearly heard in all Communicators.
- ❑ Have the vehicle driven away from the order taker booth. The system should become silent.

F. Channel "B" Communication

- ❑ Turn on all Communicators. Be certain there is a fully charged battery in each Communicator. Press button "B" on one Communicator and speak into the headset microphone. Be certain you are heard through all other Communicator headsets. Repeat this check with each Communicator.
- ❑ Check to be certain no voice is heard at the outside speaker/microphone while the "B" button is being pressed.

G. Audio Level Adjustment

The audio level for communication is factory preset, and should not require adjustment. If the outside speaker or vehicle present tone need to be adjusted, do the following.

- ❑ Using one COMMUNICATOR®, set Off/Volume control to mid-level.
- ❑ Check the level of the vehicle-present tone by having a vehicle driven up to the outside speaker, or pressing the override switch. If necessary, adjust the "VP level control" on the base station audio circuit board.
- ❑ If the audio level at the speaker post needs changing, adjust the "outside speaker level" control on the base station audio circuit board.
- ❑ If the audio level at the MM100 Monitor/Grill Speaker needs changing, adjust the "grill speaker level" control on the base station audio circuit board. Refer to page 59.

H. System Shutdown

The system checkout has been completed. Turn all Communicators off.

Do not disconnect or turn off the base station. It will remain on continuously.

I. System Operation Orientation

The customer must thoroughly understand the equipment setup and operation to use it successfully. The installer must orient store personnel to the function and proper use of the system, in accordance with the operating instructions. Explain the following points in detail.

- ❑ Component functions and correct wearing of Communicator
- ❑ Correct placement/use of battery charger, and when and how to change/recharge batteries
- ❑ Proper care and handling of the headsets and other equipment

VIII. TROUBLESHOOTING AND CORRECTING PROBLEMS

The following circuit board illustration and troubleshooting chart will help you solve any minor operating problems which could arise with the equipment. To simplify correction of such problems, the base station has small indicator lights on it. The ON or OFF condition of those lights will help you to find most problems which could occur. The indicator lights and circuit board connectors are shown on the circuit board illustration on page 61. If you are unable to diagnose and correct any problems using the troubleshooting chart and wiring diagrams, call the HME Customer Support Department at 1-800-848-4468.

TROUBLESHOOTING CHECKLIST

Problem	Probable Cause	Solution
No sound in headset when you press COMMUNICATOR® button A and speak into headset microphone.	1. Power is off at base station. 2. Power supply in base station is not working. 3. Communicator not turned on. 4. Volume not set correctly. 5. Headset connector not plugged firmly into Communicator. 6. Headset defective. 7. Low or dead battery. 8. Communicator failed.	1. Check circuit breaker for building. 2. Check power supply indicator lights in base station. If any light is not lit, be certain AC power adaptor is plugged into AC electrical outlet, and is connected to base station. 3. Turn Communicator on by turning OFF/VOLUME control clockwise. 4. Turn OFF/VOLUME control clockwise. 5. Plug headset connector firmly into Communicator receptacle. 6. Replace with another headset. 7. Check ON/POWER light. If not lit, replace battery. 8. Use another Communicator. Call HME. *
Communicator channel A or B functions not working.	1. Communicator not turned ON. 2. Dead or weak battery in one Communicator. 3. One Communicator failed. Channel A or B light does not light when Communicator button A or B is pressed.	1. Turn on Communicator being used. 2. Replace battery. 3. Use another Communicator. Call HME. *
Outbound sound too low.	1. Outbound volume set too low for environment.	1. Turn outside speaker level adjustment clockwise with small screwdriver until level is satisfactory.
No outbound sound; customer cannot hear anything.	1. Loose speaker wires on base station. 2. Defective speaker.	1. Check speaker wire connections to base station. 2. Call HME. *

* For assistance, call the HME Customer Support Department at 1-800-848-4468.

Problem	Probable Cause	Solution
Personnel hear static only in headsets.	1. Transmitter antenna connection in base station loose. 2. Transmitter board defective.	1. Tighten connection. 2. Call HME. *
Personnel hear customer in headsets or grill speaker, but cannot hear each other.	1. Receiver antenna connection in base station loose. 2. Transceiver board is defective. Transceiver power light is not lit. 3. Defective COMMUNICATOR® or headset.	1. Tighten connection.. 2. Call HME. * 3. Call HME. *
No tone or sound in headset or grill speaker when vehicle approaches speaker post.	1. Power interruption has unbalanced detecting circuit. 2. Vehicle detector failed, or connector is loose.	1. When no vehicle is at speaker, press RESET switch on base station. 2. Place vehicle detector override switch in OVERRIDE position. This will cause audio loop to remain open for communication with customer. Check connectors on base station. If loose, reconnect and return override switch to NORMAL. Call HME. *
Personnel cannot hear drive-thru customers in headset.	1. Loose wires on audio circuit board in base station. 2. Outside speaker or audio circuit board has failed.	1. Be certain red, black and shield wires are securely connected to connector on base station. 2. Call HME. *
Communicator has intermittent sound.	1. Low battery. 2. Defective headset cable.	1. Replace battery. 2. Use another headset. Call HME. *
Battery charger not working.	1. Charger not plugged in. Check for red lights.	1. Plug in battery charger. If still not working, call HME. *
Feedback heard in Communicator headset	1. Green and white wires of second audio cable reversed. 2. Outside speaker volume (outgoing) control turned too high.	1. Reverse wires. 2. Turn volume control counterclockwise.

* For assistance, call the HME Customer Support Department at 1-800-848-4468.

WBS2500 Circuit Board Illustration

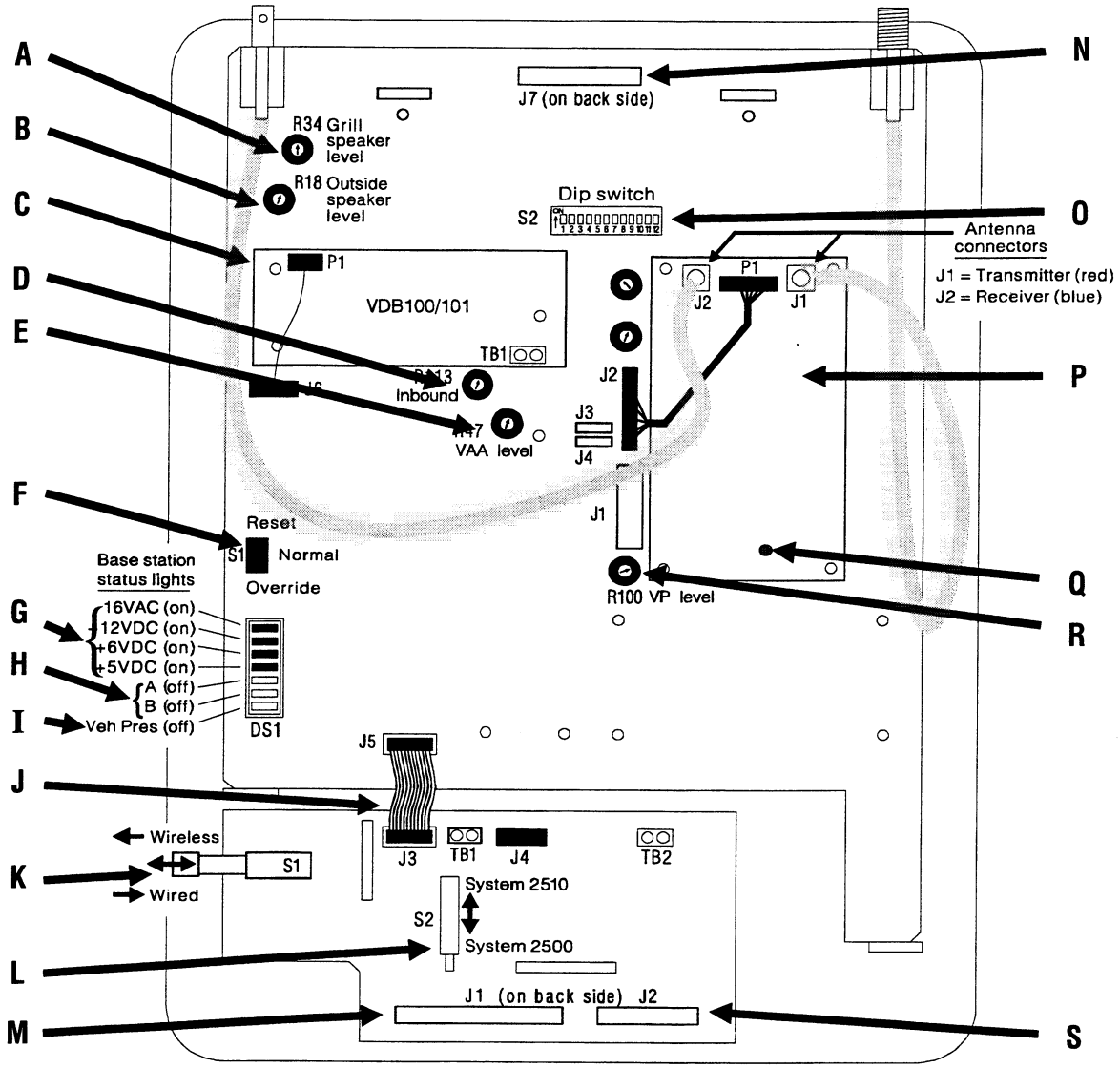

A	-	Grill Speaker Volume Control - **GRILL SPEAKER LEVEL - R34**
B	-	Outside Speaker Volume Control - **OUTSIDE SPEAKER LEVEL - R18**
C	-	Vehicle Detector Board (optional)
D	-	Inbound Volume Control - **R113**
E	-	VAA Level Control - **R47**
F	-	Vehicle Detector Override Switch - **OVERRIDE / NORMAL / RESET - S1**
G	-	Power Supply Lights - **12VDC / +5VDC / +6VDC / 16VAC**
H	-	Channel A & B Lights (on while COMMUNICATOR® button A or B is pressed) - **A / B**
I	-	Vehicle Present Indicator Light
J	-	Audio Board, Switcher Board Interconnect Cable
K	-	Wireless/Wired Select Switch - **S1**
L	-	2500/2510 Select Switch - **S2**
M	-	Switcher Interface Connector - **J1**
N	-	Power/Grill Speaker Interface Connector - **J7**
O	-	Full/Half-Duplex, Grill Select, Subaudible Select Switch - **S2** (Configuration varies)
P	-	Transceiver Board
Q	-	Power Light - **POWER**
R	-	Vehicle Present Tone Volume Control - **VP LEVEL CONTROL - R100**
S	-	Switcher Interface - **J2**

APPENDIX A: FREQUENCY SELECTION GUIDE

If you change the frequency of any HME drive-thru audio system, call HME Customer Support at 1-800-848-4468 for FCC licensing information.

HME Audio System Standard Frequencies	
Primary	**Alternate**
M1/M2	M5/M11
M3/M7	M1/M2
M4/M6	M41/M12
M5/M11	M41/M12
M41/M12	M1/M2

Synthesized Base Station and COMMUNICATOR® Transceiver Frequency Chart and Settings

COM Transmitter, Base Receiver		COM SW1 and Base Station S! Switch Settings				COM Receiver Base Transmitter		COM SW1 and Base Station S1 Switch Settings			
Freq. (MHz)	**HME Channels**	**1**	**2**	**3**	**4**	**Freq. (MHz)**	**HME Channels**	**5**	**6**	**7**	**8**
154.6000	M2	OFF	ON	OFF	ON	35.0200	M1	OFF	OFF	ON	ON
151.8950	M7	OFF	OFF	ON	OFF	33.1400	M3	ON	OFF	OFF	ON
154.5700	M6	ON	OFF	OFF	ON	30.8400	M4	OFF	ON	OFF	OFF
154.5400	M11	OFF	OFF	OFF	ON	33.4000	M5	ON	ON	OFF	ON
154.5150	M12	ON	ON	ON	OFF	33.1600	M41	OFF	ON	OFF	ON
151.6550	M21	OFF	OFF	OFF	OFF	30.4800	M23	OFF	OFF	OFF	OFF
151.6700	M26	ON	OFF	OFF	OFF	30.5800	M8	ON	OFF	OFF	OFF
151.8350	M15	OFF	ON	OFF	OFF	31.2400	M40	ON	ON	OFF	OFF
151.8650	M14	ON	ON	OFF	OFF	31.3250	M29	OFF	OFF	ON	OFF
154.4900	M9	ON	OFF	ON	OFF	31.3750	M27	ON	OFF	ON	OFF
154.5100	M24	OFF	ON	ON	OFF	31.4000	M45	OFF	ON	ON	OFF
151.6850	M20	ON	ON	OFF	ON	31.5750	M31	ON	ON	ON	OFF
151.7150	M19	OFF	OFF	ON	ON	32.4800	M25	OFF	OFF	OFF	ON
151.7450	M18	ON	OFF	ON	ON	35.1200	M37	ON	OFF	ON	ON
151.7750	M17	OFF	ON	ON	ON	35.8800	M39	OFF	ON	ON	ON
151.8050	M16	ON	ON	ON	ON	35.9600	M38	ON	ON	ON	ON

COMMUNICATOR® CTCSS Tone Frequency Chart and Settings

Tone Set No.	COM SW2 Switch Settings				RX Tone (Hz)	TX A Tone (Hz)	TX B Tone (Hz)
---	1	2	3	4	---	---	---
7	OFF	OFF	OFF	OFF	71.9	77.0	114.8
8	ON	OFF	OFF	OFF	82.5	88.5	123.0
9	OFF	ON	OFF	OFF	146.2	151.4	203.5
10	ON	ON	OFF	OFF	156.7	162.2	218.1
11	OFF	OFF	ON	OFF	167.9	173.8	233.6